TETON

ES BUILD

2007.11.28

DATE	CHANGE NO.	REV

	EE	DATE	POWER	DATE
DRAWER				
DESIGN				
CHECK				
RESPONSIBLE				

SIZE = 3 VER :

FILE NAME : XXXX-XXXXXX-XX

P/N XXXXXXXXXXXX

INVENTEC

TITLE TETON

SIZE	CODE	DOC. NUMBER	REV
A3	CS	Model_No	X01

SHEET 1 OF 56

TABLE OF CONTENTS

PAGE

MAINBOARD

1.COVER PAGE
2.INDEX
3.BLOCK DIAGRAM
4.POWER SEQUENCE BLOCK
5-12.SYSTEM POWER
13.CLOCK GENERATOR
14-17.CPU Merom
18.FAN & THERMAL CONTROLLER
19-25.N/B Crestline
26.DDR2 DIMM0
27.DDR2 DIMM1
28.DDR DAMPING
29.MXM CONN
30.CRT CONN
31.HDMI & DP CONN
32.LCD CONN
33-37.S/B ICH8M
38.LAN CONTROLLER
39.RJ45 CONN
40.MINI CARD

PAGE

41.SATA HDD&ODD
42.USB CONN
43.BLUE TOOTH & MDC CONN
44.KBC
45.AUDIO CODEC
46.AUDIO JACK
47.AUDIO AMP
48.AUDIO AMP & SPK CONN
49.SCREW
50.MB TO OTHER B CONN
51.USB BOARD
52.POWER BUTTON BOARD
53.TP BUTTON BOARD
54.LED1 BOARD
55.LED2 BOARD
56.E KEY BOARD

PAGE

I/O BOARD

1.EXPRESS CARD CONN
2.CARD READER CONTROLLER

HOTKEY BOARD

1.HOTKEY BOARD

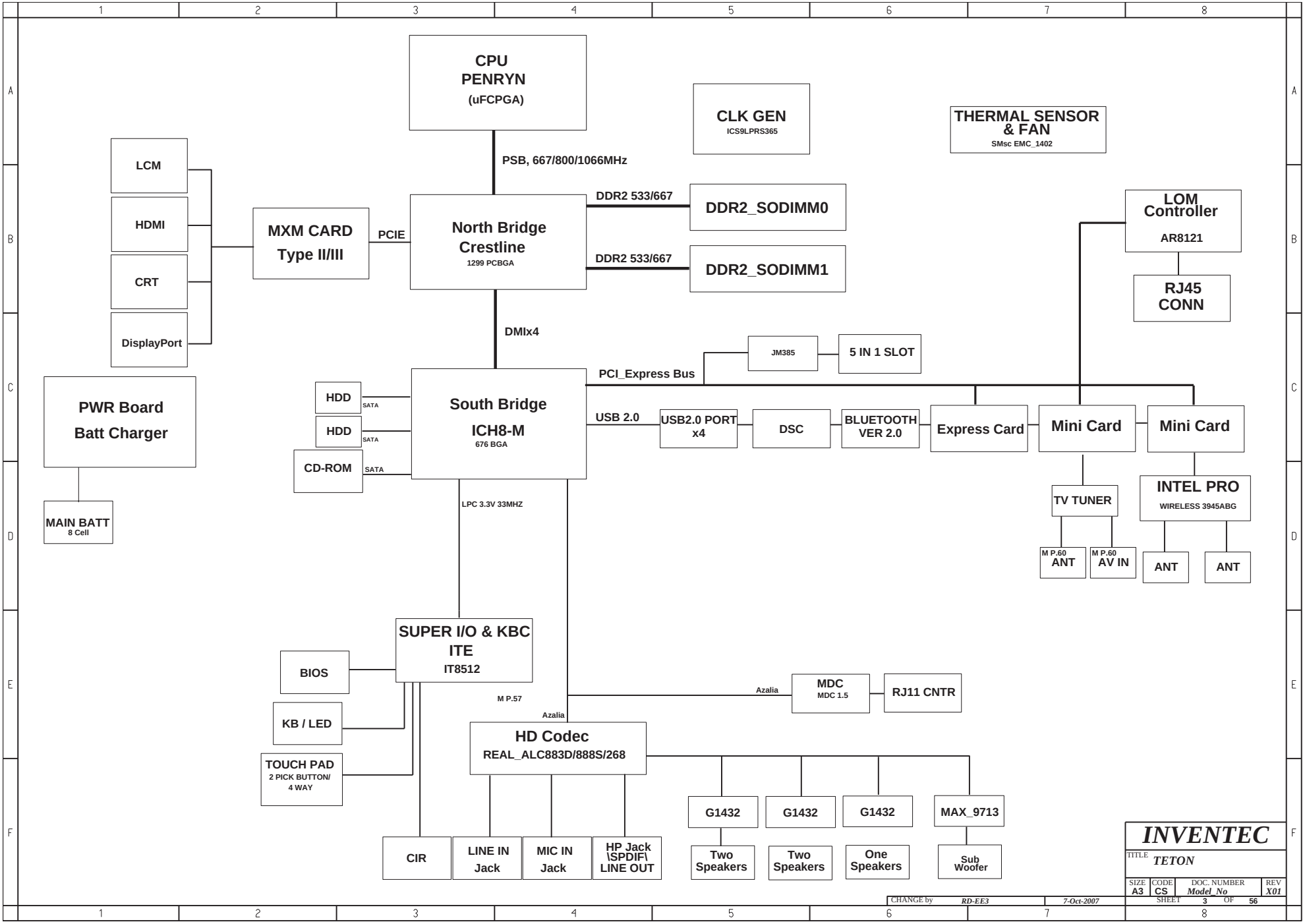
CPU
PENRYN
(uFCPGA)
CLK GEN
ICS9LPRS365
THERMAL SENSOR
& FAN
SMsc EMC_1402
PSB, 667/800/1066MHz
LCM
HDMI
CRT
DisplayPort
MXM CARD
Type II/III
PCIE
North Bridge
Crestline
1299 PCBGA
DDR2 533/667
DDR2_SODIMM0
DDR2 533/667
DDR2_SODIMM1
LOM
Controller
AR8121
RJ45
CONN
DMIx4
JM385
5 IN 1 SLOT
PCI_Express Bus
PWR Board
Batt Charger
HDD
SATA
HDD
SATA
CD-ROM
SATA
South Bridge
ICH8-M
676 BGA
USB 2.0
USB2.0 PORT
x4
DSC
BLUETOOTH
VER 2.0
Express Card
Mini Card
Mini Card
TV TUNER
INTEL PRO
WIRELESS 3945ABG
M P.60
ANT
M P.60
AV IN
ANT
ANT
MAIN BATT
8 Cell
LPC 3.3V 33MHZ
SUPER I/O & KBC
ITE
IT8512
BIOS
KB / LED
TOUCH PAD
2 PICK BUTTON/
4 WAY
M P.57
Azalia
MDC
MDC 1.5
RJ11 CNTR
Azalia
HD Codec
REAL_ALC883D/888S/268
G1432
G1432
G1432
MAX_9713
Two
Speakers
Two
Speakers
One
Speakers
Sub
Woofer
CIR
LINE IN
Jack
MIC IN
Jack
HP Jack
\SPDIF\
LINE OUT
INVENTEC
TITLE
TETON
SIZE
A3
CODE
CS
DOC. NUMBER
Model_No
REV
X01
CHANGE by
RD-EE3
7-Oct-2007
SHEET
3
OF
56

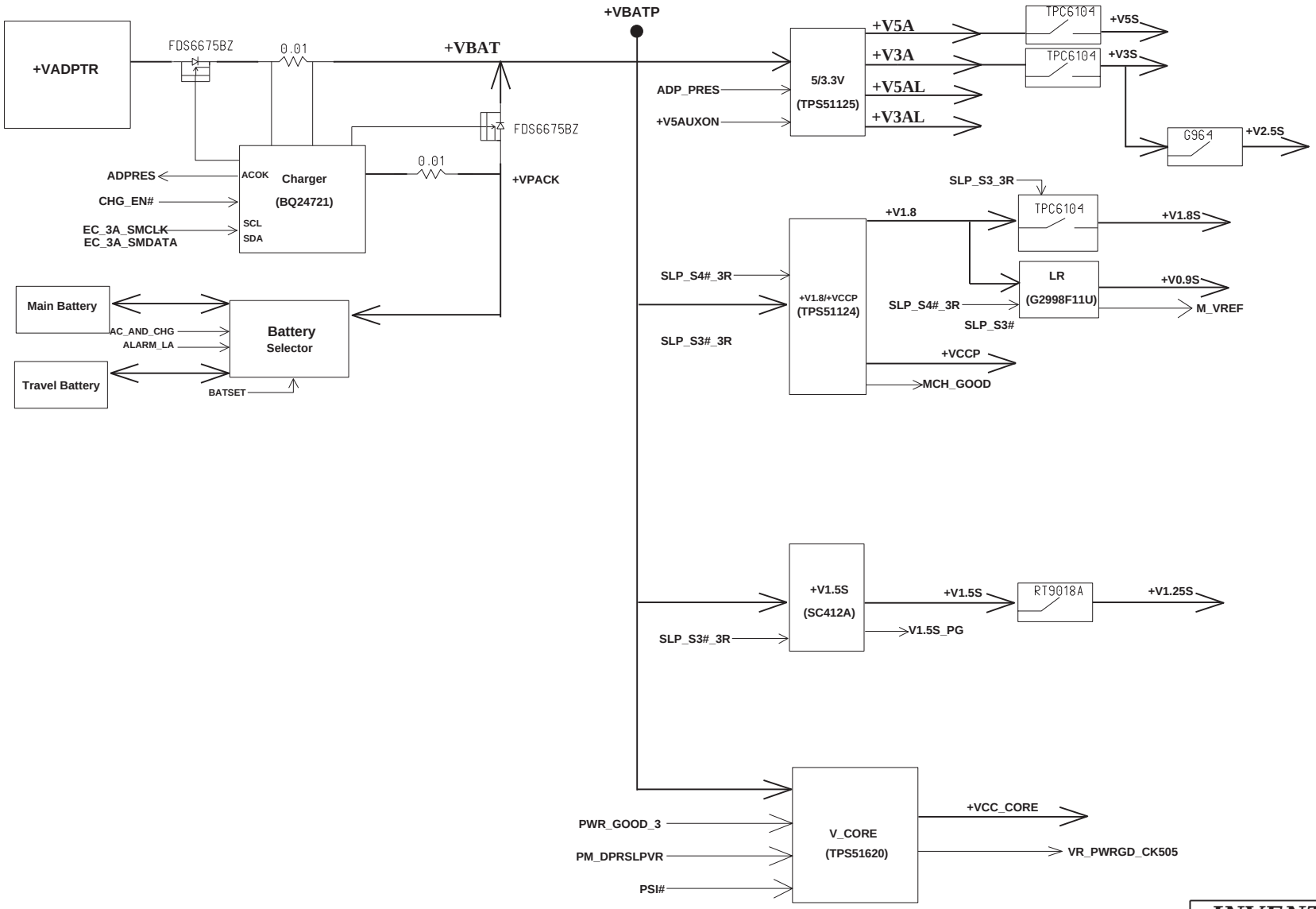

INVENTEC

TITLE TETON

SIZE	CODE	DOC. NUMBER	REV
A3	CS	Model_No	X01

CHANGE by RD-EE3 17-Oct-2007 SHEET 4 OF 56

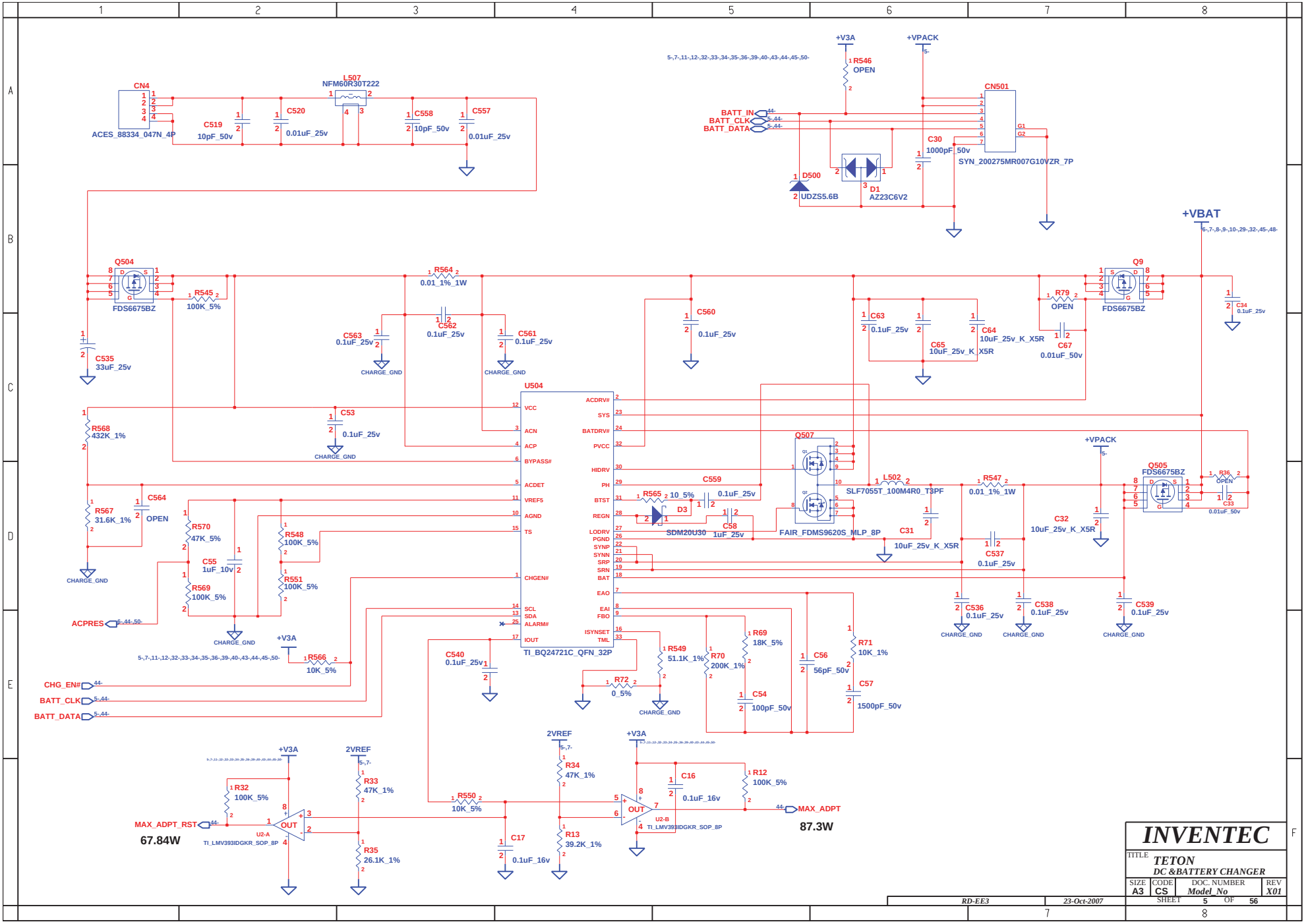
CN4
ACES_88334_047N_4P
L507
NFM60R30T222
C519
10pF_50v
C520
0.01uF_25v
C558
10pF_50v
C557
0.01uF_25v
+V3A
+VPACK
R546
OPEN
CN501
SYN_200275MR007G10VZR_7P
BATT_IN
BATT_CLK
BATT_DATA
C30
1000pF_50v
D500
UDZS5.6B
D1
AZ23C6V2
+VBAT
Q504
FDS6675BZ
R545
100K_5%
R564
0.01_1%_1W
C563
0.1uF_25v
C562
0.1uF_25v
C561
0.1uF_25v
CHARGE_GND
C560
0.1uF_25v
C63
0.1uF_25v
C64
10uF_25v_K_X5R
C65
10uF_25v_K_X5R
R79
OPEN
C67
0.01uF_50v
Q9
FDS6675BZ
C34
0.1uF_25v
C535
33uF_25v
U504
TI_BQ24721C_QFN_32P
VCC
ACN
ACP
BYPASS#
ACDET
VREF5
AGND
TS
CHGEN#
SCL
SDA
ALARM#
IOUT
ACDRV#
SYS
BATDRV#
PVCC
HIDRV
PH
BTST
REGN
LODRV
PGND
SYNP
SYNN
SRP
SRN
BAT
EAO
EAI
FBO
ISYNSET
TML
C53
0.1uF_25v
R568
432K_1%
R567
31.6K_1%
C564
OPEN
R570
47K_5%
C55
1uF_10v
R569
100K_5%
R548
100K_5%
R551
100K_5%
ACPRES
R566
10K_5%
R565
10_5%
D3
SDM20U30
C559
0.1uF_25v
C58
1uF_25v
Q507
FAIR_FDMS9620S_MLP_8P
L502
SLF7055T_100M4R0_T3PF
C31
10uF_25v_K_X5R
R547
0.01_1%_1W
C537
0.1uF_25v
C32
10uF_25v_K_X5R
Q505
FDS6675BZ
R36
OPEN
C33
0.01uF_50v
C536
0.1uF_25v
C538
0.1uF_25v
C539
0.1uF_25v
C540
0.1uF_25v
R549
51.1K_1%
R70
200K_1%
R69
18K_5%
R72
0_5%
C54
100pF_50v
C56
56pF_50v
R71
10K_1%
C57
1500pF_50v
CHG_EN#
BATT_CLK
BATT_DATA
2VREF
R32
100K_5%
R33
47K_1%
R35
26.1K_1%
MAX_ADPT_RST
67.84W
U2-A
TI_LMV393IDGKR_SOP_8P
R550
10K_5%
C17
0.1uF_16v
R34
47K_1%
R13
39.2K_1%
C16
0.1uF_16v
R12
100K_5%
U2-B
MAX_ADPT
87.3W
INVENTEC
TITLE
TETON
DC &BATTERY CHANGER
SIZE A3
CODE CS
DOC. NUMBER Model_No
REV X01
RD-EE3
23-Oct-2007
SHEET 5 OF 56

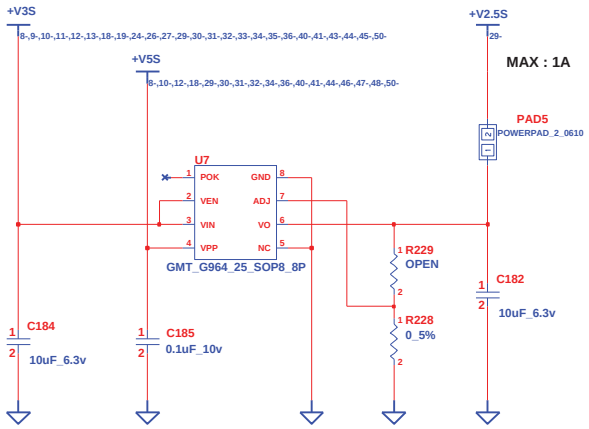

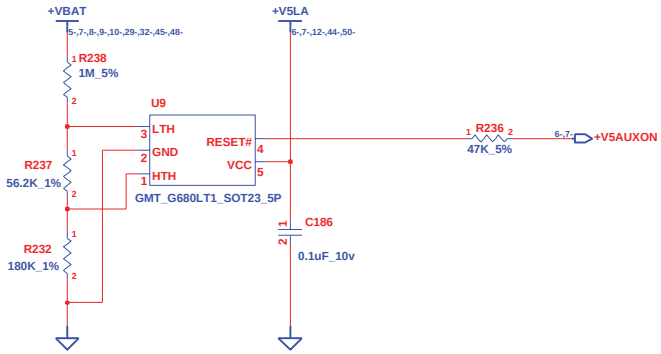

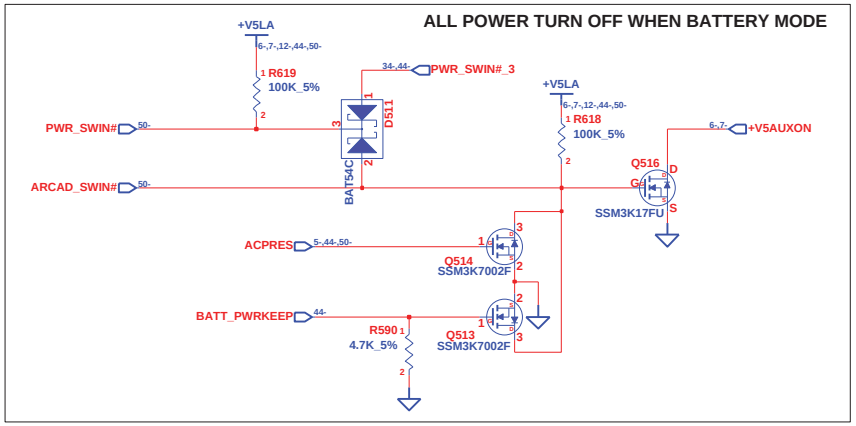

INVENTEC			
TITLE	TETON +V2.5S / RESET		
SIZE A3	CODE CS	DOC. NUMBER Model_No	REV X01
CHANGE by RD-EE3	9-Oct-2007	SHEET 6 OF 56	

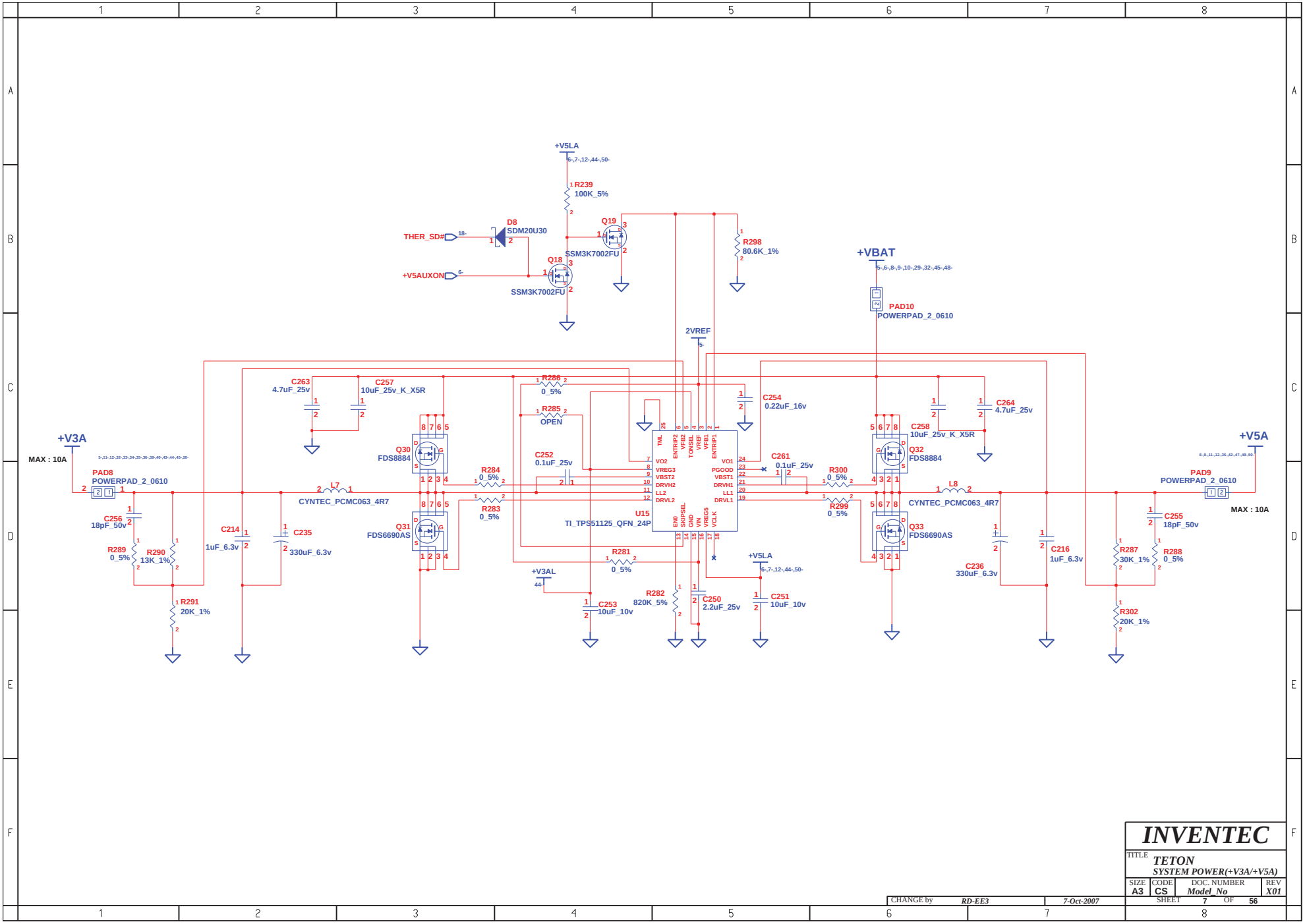

INVENTEC

TITLE **TETON**
SYSTEM POWER(+V3A/+V5A)

SIZE	CODE	DOC. NUMBER	REV
A3	CS	Model_No	X01

CHANGE by RD-EE3 7-Oct-2007

SHEET 7 OF 56

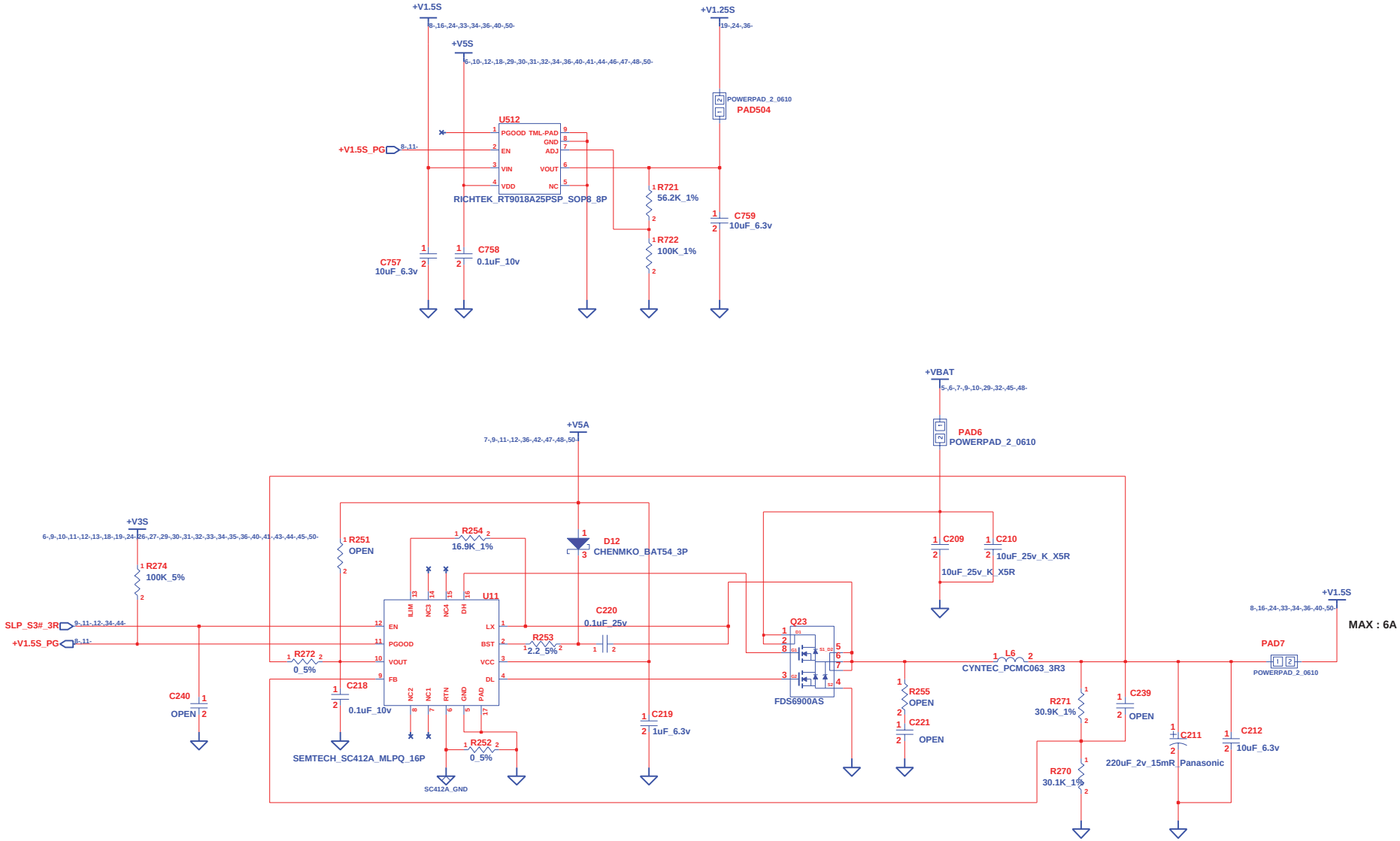

INVENTEC			
TITLE TETON SYSTEM POWER (+V1.8 / +V1.25S)			
SIZE A3	CODE CS	DOC. NUMBER Model_No	REV X01
CHANGE by RD-EE3	7-Oct-2007	SHEET 8 OF 56	

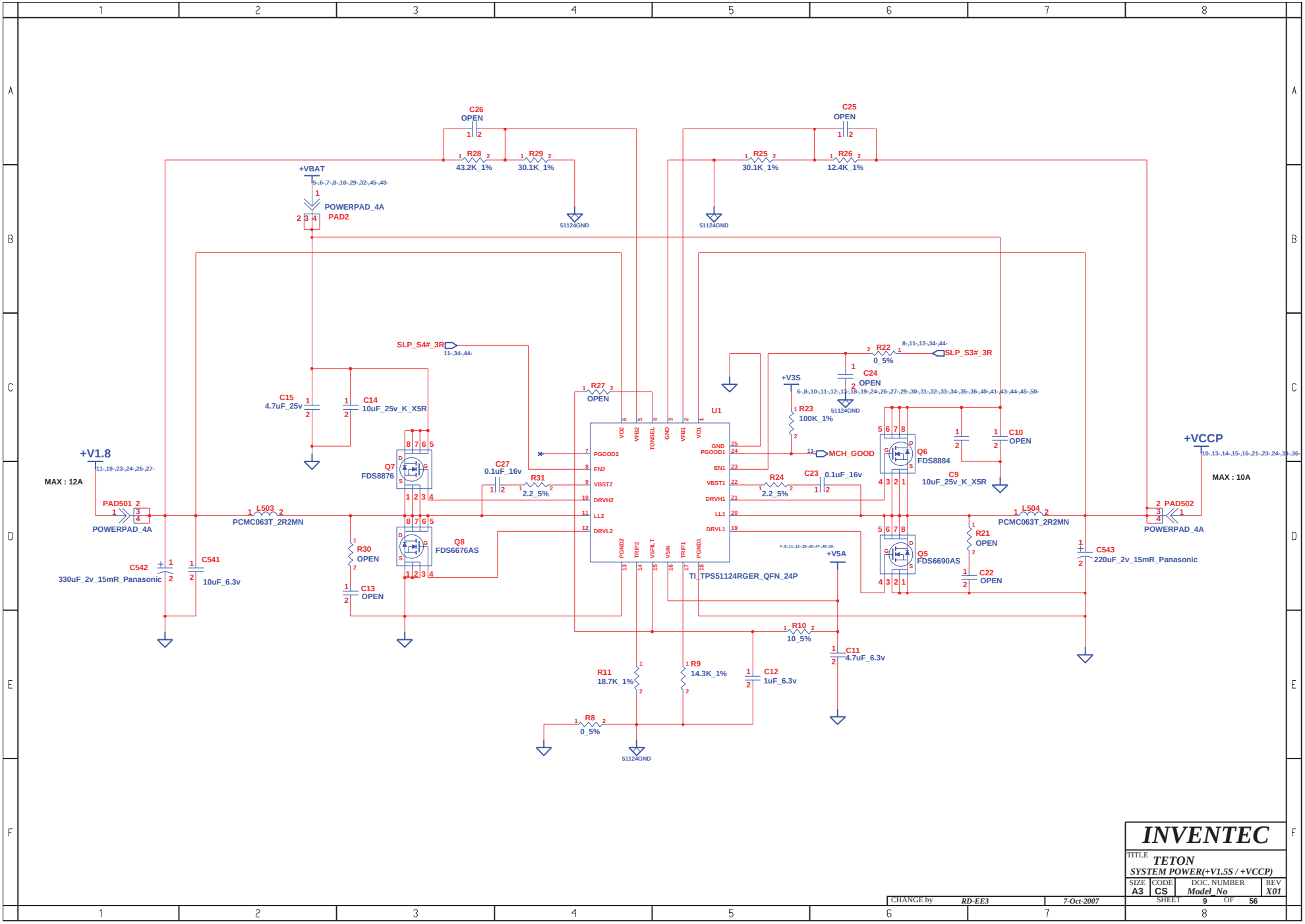

INVENTEC

TITLE **TETON**

SYSTEM POWER(+V1.5S / +VCCP)

SIZE	CODE	DOC. NUMBER	REV
A3	CS	Model_No	X01

CHANGE by RD-EE3 7-Oct-2007

SHEET 9 OF 56

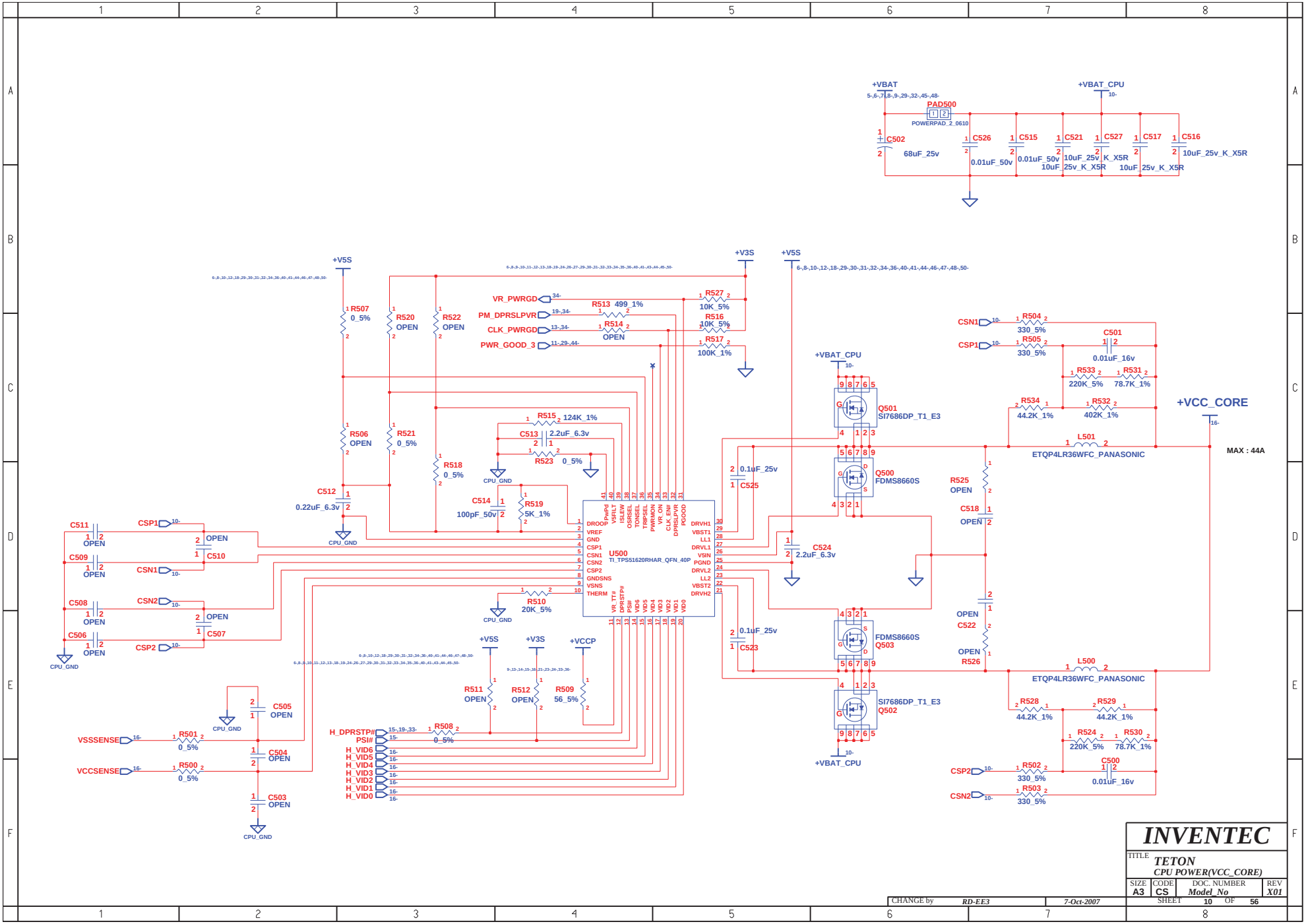
+VBAT
+VBAT_CPU
PAD500
POWERPAD_2_0610
C502
68uF_25v
C526
0.01uF_50v
C515
0.01uF_50v
C521
10uF_25v_K_X5R
C527
10uF_25v_K_X5R
C517
10uF_25v_K_X5R
C516
10uF_25v_K_X5R
+V5S
+V3S
VR_PWRGD
PM_DPRSLPVR
CLK_PWRGD
PWR_GOOD_3
R507 0_5%
R520 OPEN
R522 OPEN
R513 499_1%
R514 OPEN
R527 10K_5%
R516 10K_5%
R517 100K_1%
R506 OPEN
R521 0_5%
R518 0_5%
R515 124K_1%
C513 2.2uF_6.3v
R523 0_5%
C512 0.22uF_6.3v
C514 100pF_50v
R519 5K_1%
CPU_GND
U500
TI_TPS51620RHAR_QFN_40P
DROOP
VREF
GND
CSP1
CSN1
CSN2
CSP2
GNDSNS
VSNS
THERM
DRVH1
VBST1
LL1
DRVL1
VSIN
PGND
DRVL2
LL2
VBST2
DRVH2
C511 OPEN
C509 OPEN
C508 OPEN
C506 OPEN
C510 OPEN
C507 OPEN
CSP1
CSN1
CSN2
CSP2
R510 20K_5%
+VCCP
R511 OPEN
R512 OPEN
R509 56_5%
C505 OPEN
C504 OPEN
C503 OPEN
VSSSENSE
VCCSENSE
R501 0_5%
R500 0_5%
H_DPRSTP#
PSI#
H_VID6
H_VID5
H_VID4
H_VID3
H_VID2
H_VID1
H_VID0
R508 0_5%
Q501 SI7686DP_T1_E3
Q500 FDMS8660S
FDMS8660S Q503
SI7686DP_T1_E3 Q502
C525 0.1uF_25v
C524 2.2uF_6.3v
C523 0.1uF_25v
R525 OPEN
C518 OPEN
C522 OPEN
R526 OPEN
CSN1
CSP1
R504 330_5%
R505 330_5%
C501 0.01uF_16v
R533 220K_5%
R531 78.7K_1%
R534 44.2K_1%
R532 402K_1%
+VCC_CORE
L501 ETQP4LR36WFC_PANASONIC
MAX : 44A
L500 ETQP4LR36WFC_PANASONIC
R528 44.2K_1%
R529 44.2K_1%
R524 220K_5%
R530 78.7K_1%
C500 0.01uF_16v
CSP2
CSN2
R502 330_5%
R503 330_5%
INVENTEC
TITLE
TETON
CPU POWER(VCC_CORE)
SIZE A3
CODE CS
DOC. NUMBER Model_No
REV X01
CHANGE by RD-EE3
7-Oct-2007
SHEET 10 OF 56

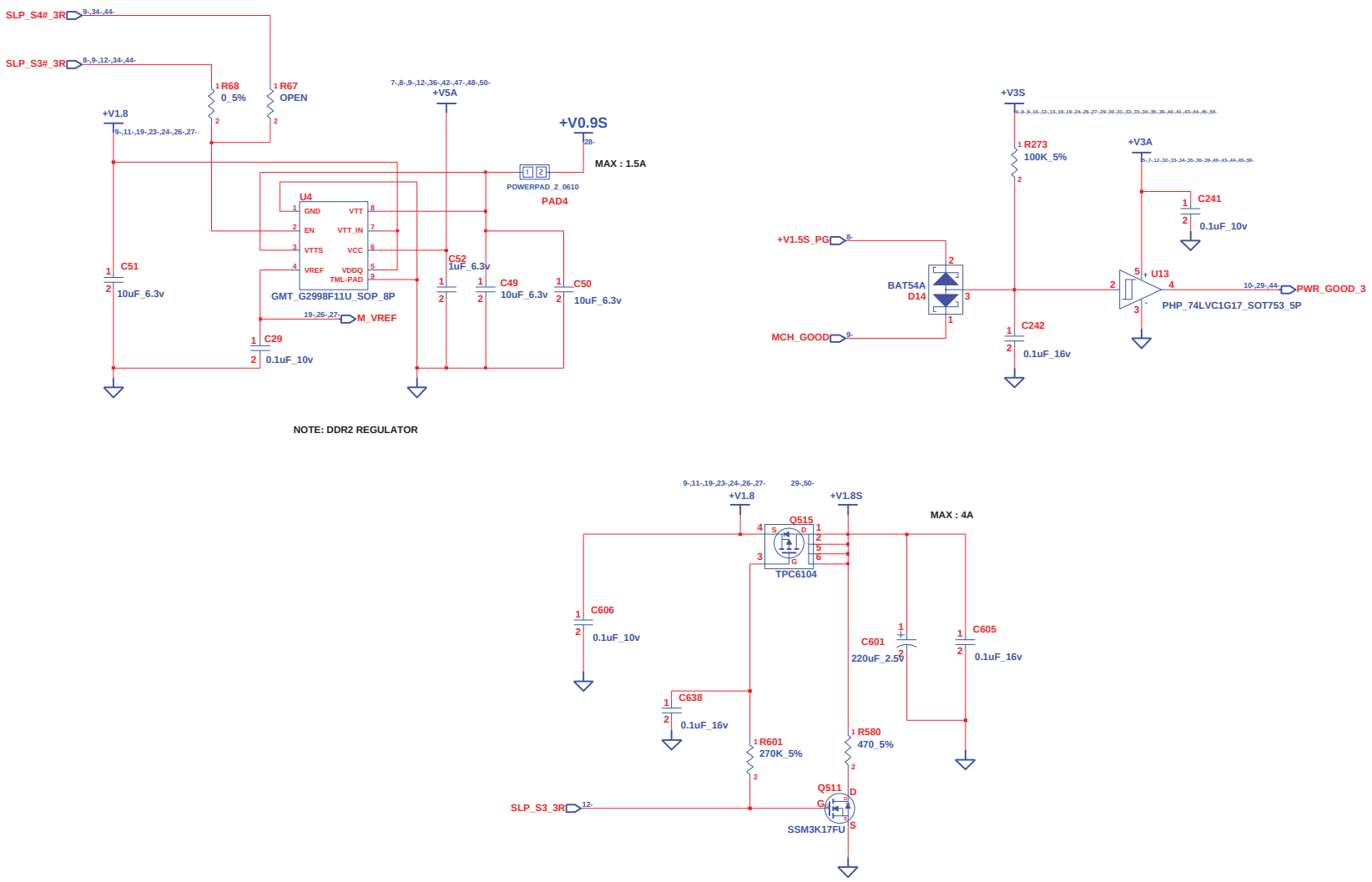

INVENTEC

TITLE **TETON**
+V0.9S / +V1.8S / POWER GOOD

SIZE	CODE	DOC. NUMBER	REV
A3	CS	Model_No	X01

CHANGE by RD-EE3 7-Oct-2007

SHEET 11 OF 56

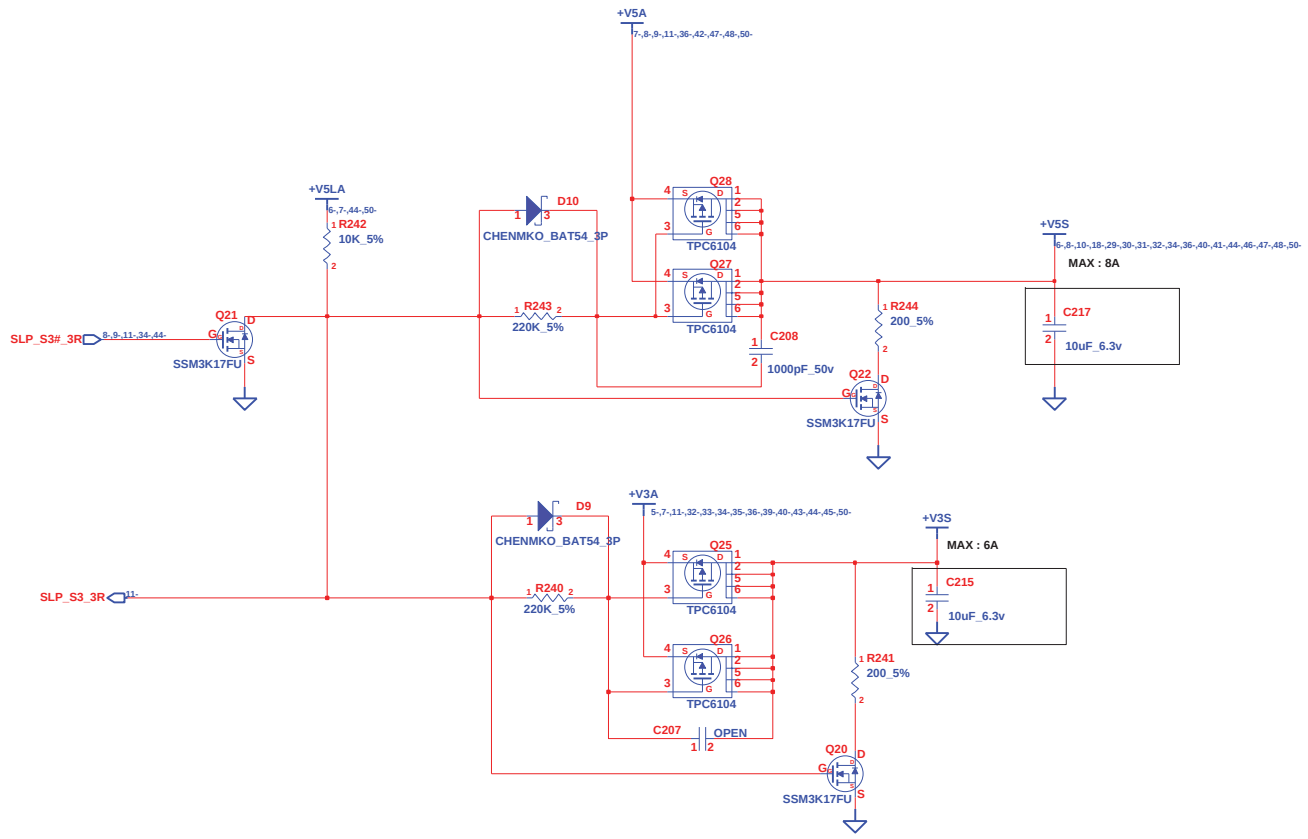

INVENTEC			
TITLE	TETON POWER(+V3S / +V5S)		
SIZE A3	CODE CS	DOC. NUMBER Model_No	REV X01
CHANGE by RD-EE3	23-Oct-2007	SHEET 12 OF 56	

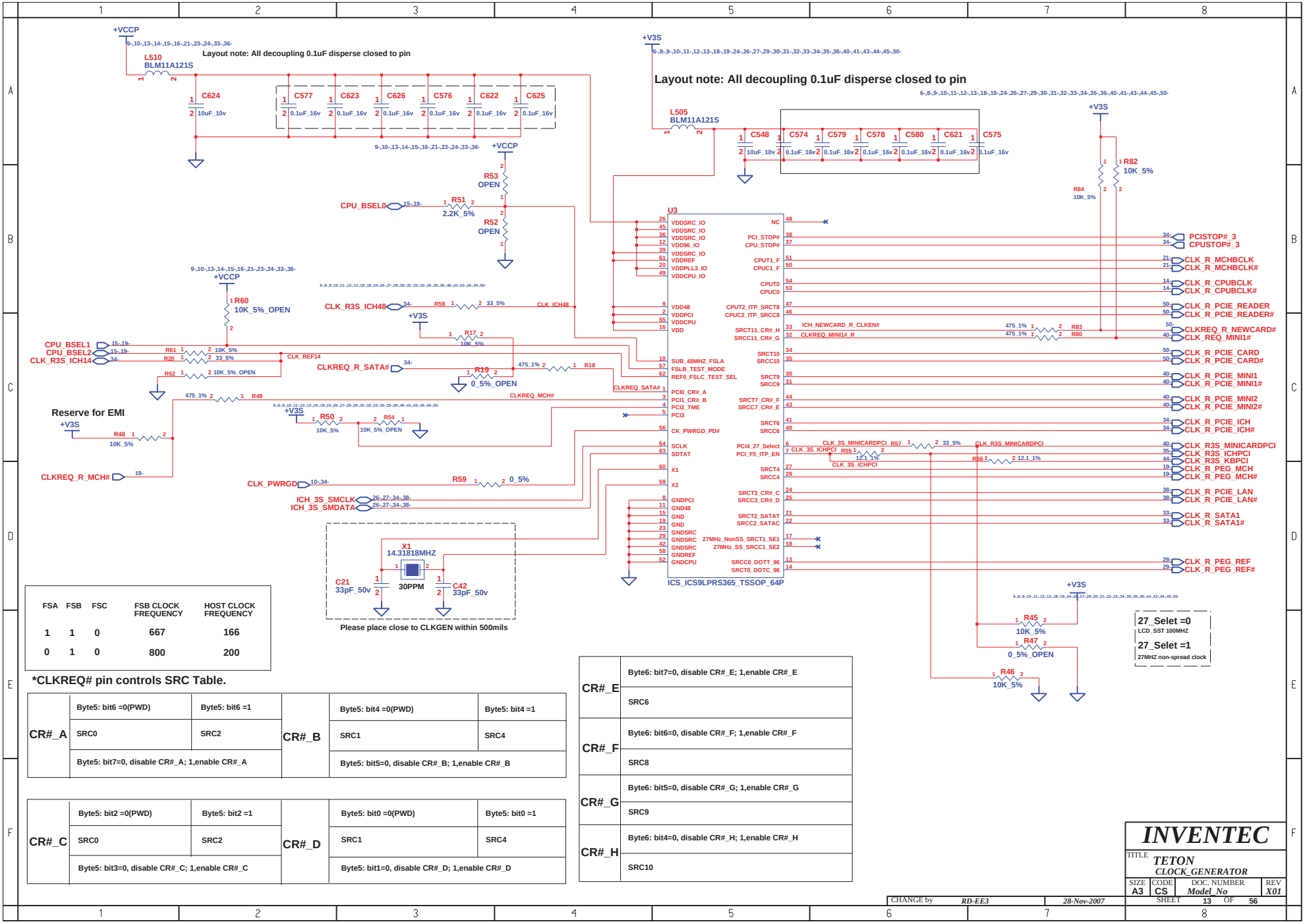

FSA	FSB	FSC	FSB CLOCK FREQUENCY	HOST CLOCK FREQUENCY
1	1	0	667	166
0	1	0	800	200

***CLKREQ# pin controls SRC Table.**

CR#_A	Byte5: bit6 =0(PWD)	Byte5: bit6 =1	CR#_B	Byte5: bit4 =0(PWD)	Byte5: bit4 =1
	SRC0	SRC2		SRC1	SRC4
	Byte5: bit7=0, disable CR#_A; 1,enable CR#_A			Byte5: bit5=0, disable CR#_B; 1,enable CR#_B	

CR#_C	Byte5: bit2 =0(PWD)	Byte5: bit2 =1	CR#_D	Byte5: bit0 =0(PWD)	Byte5: bit0 =1
	SRC0	SRC2		SRC1	SRC4
	Byte5: bit3=0, disable CR#_C; 1,enable CR#_C			Byte5: bit1=0, disable CR#_D; 1,enable CR#_D	

CR#_E	Byte6: bit7=0, disable CR#_E; 1,enable CR#_E
	SRC6
CR#_F	Byte6: bit6=0, disable CR#_F; 1,enable CR#_F
	SRC8
CR#_G	Byte6: bit5=0, disable CR#_G; 1,enable CR#_G
	SRC9
CR#_H	Byte6: bit4=0, disable CR#_H; 1,enable CR#_H
	SRC10

INVENTEC

TITLE TETON CLOCK_GENERATOR

SIZE	CODE	DOC. NUMBER	REV
A3	CS	Model_No	X01

CHANGE by RD-EE3 28-Nov-2007 SHEET 13 OF 56

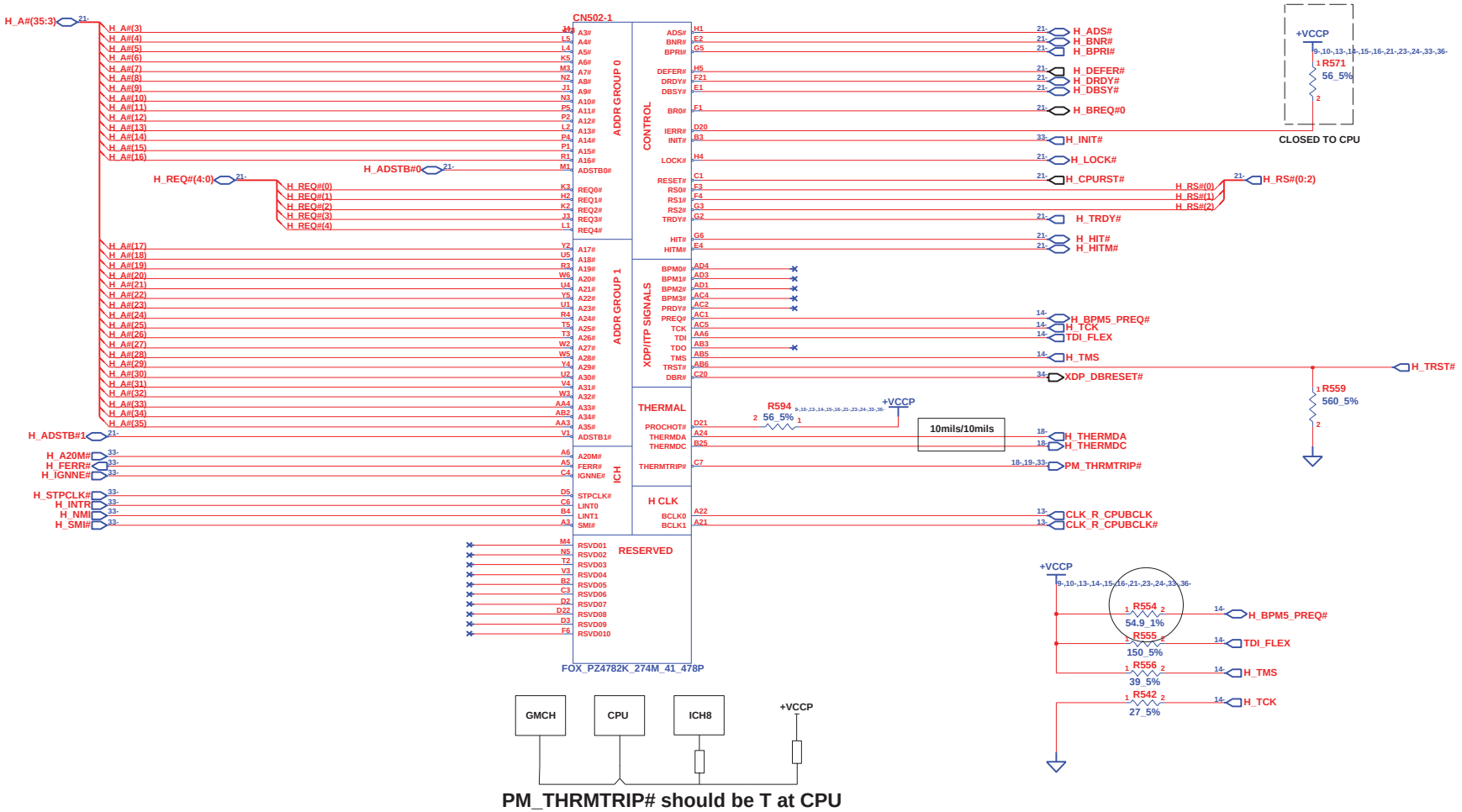

PM_THRMTRIP# should be T at CPU

INVENTEC			
TITLE: TETON Merom-1			
SIZE A3	CODE CS	DOC. NUMBER Model_No	REV X01
CHANGE by RD-EE3	28-Nov-2007	SHEET 14 OF 56	

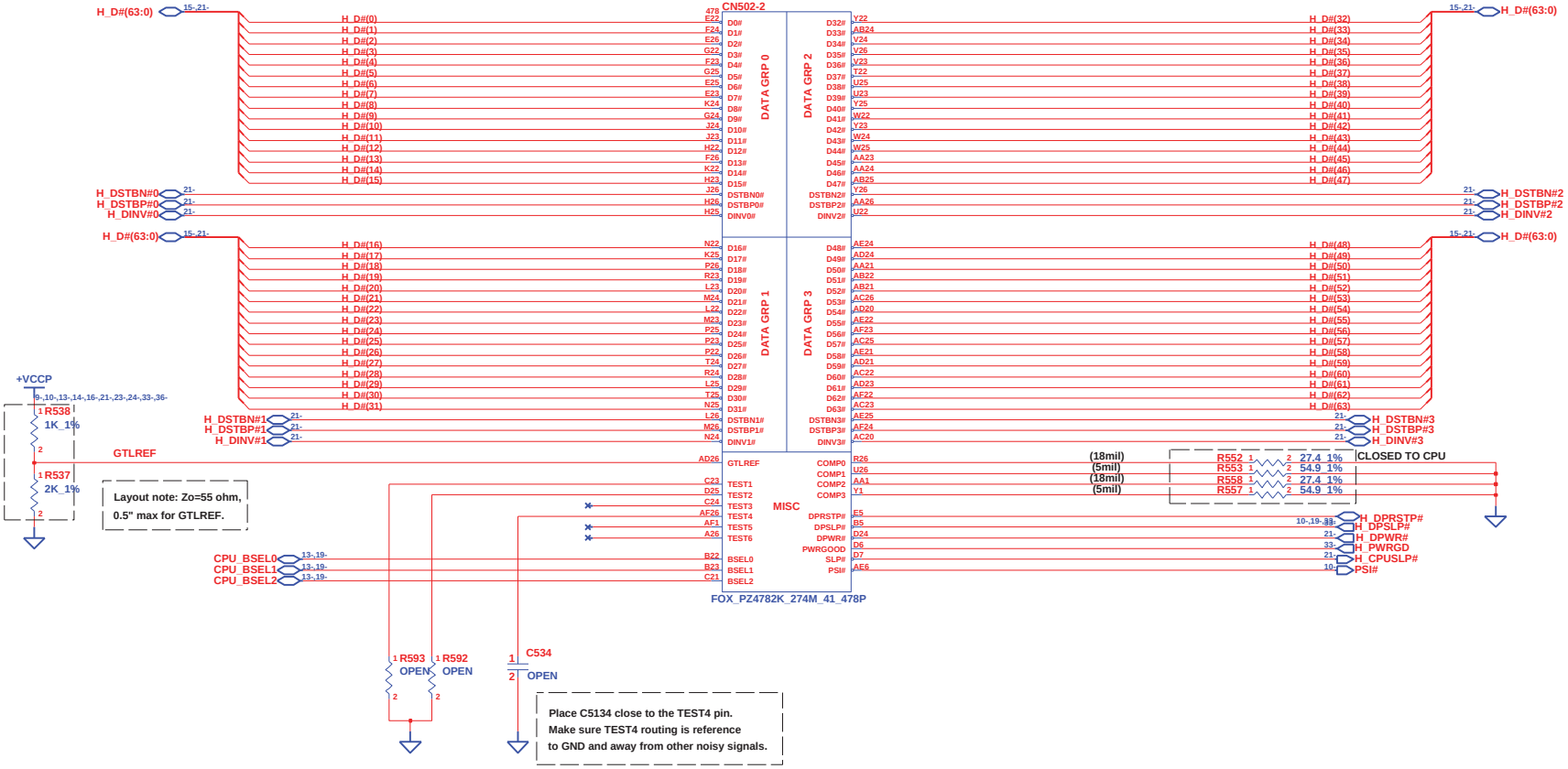

INVENTEC			
TITLE TETON Merom-2			
SIZE A3	CODE CS	DOC. NUMBER Model_No	REV X01
CHANGE by RD-EE3	25-Oct-2007	SHEET 15 OF 56	

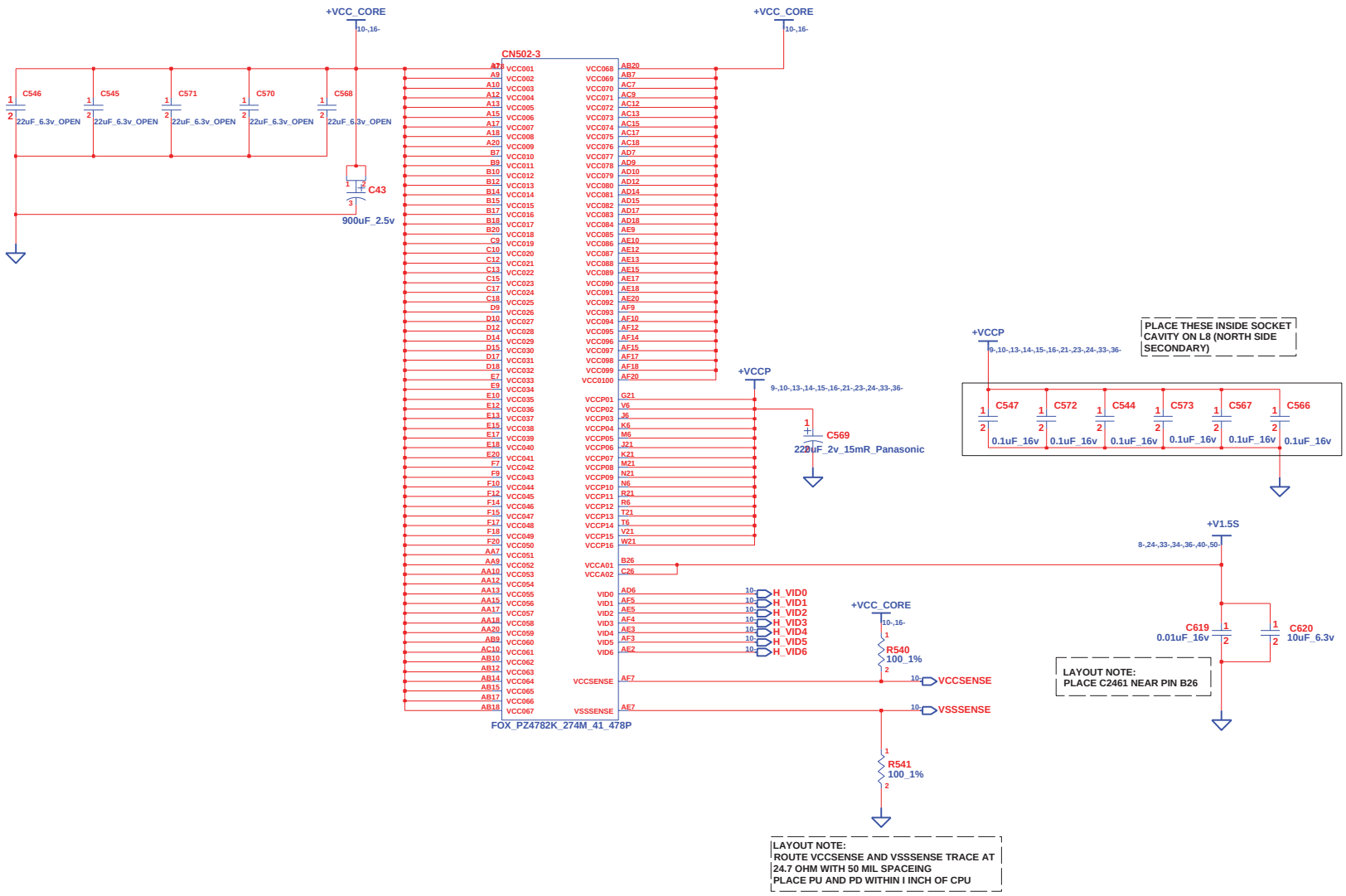

INVENTEC

TITLE TETON
Merom-3

SIZE	CODE	DOC. NUMBER	REV
A3	CS	Model_No	X01

CHANGE by RD-EE3 10-Oct-2007

SHEET 16 OF 56

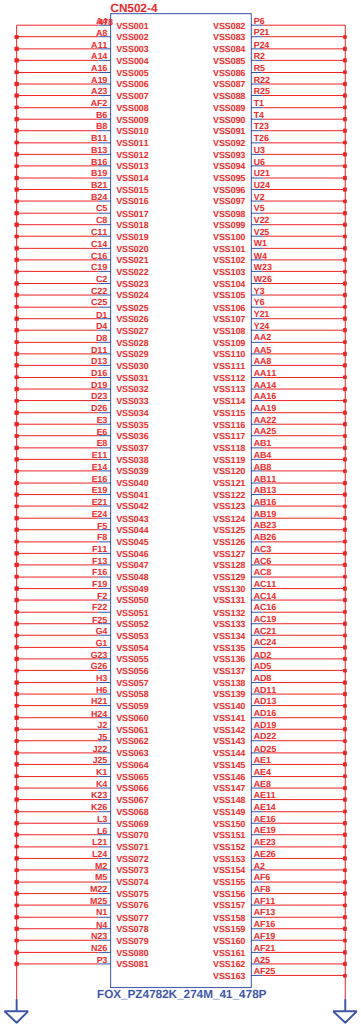

CHANGE by	RD-EE3	10-Oct-2007	

INVENTEC

TITLE **TETON**
Merom-4

SIZE	CODE	DOC. NUMBER	REV
A3	CS	Model_No	X01

SHEET 17 OF 56

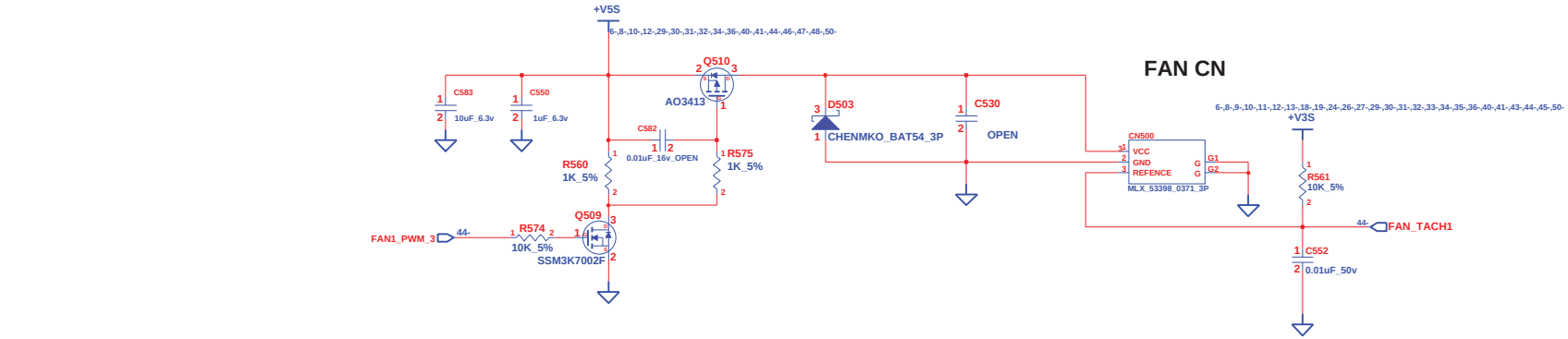

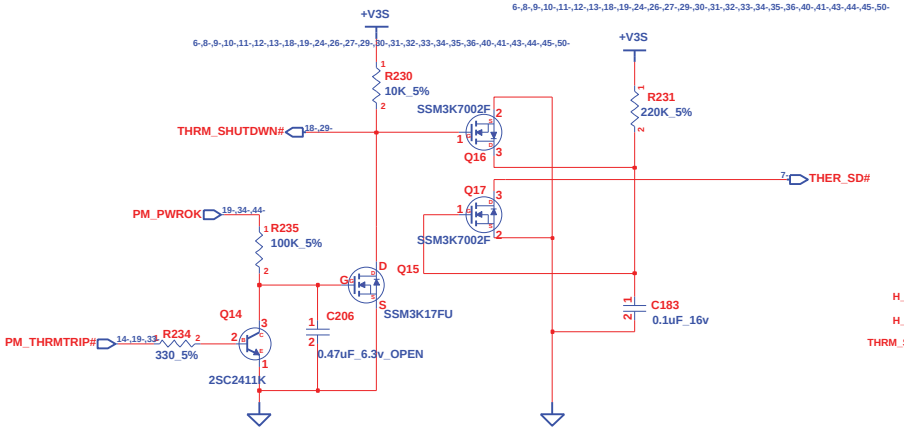

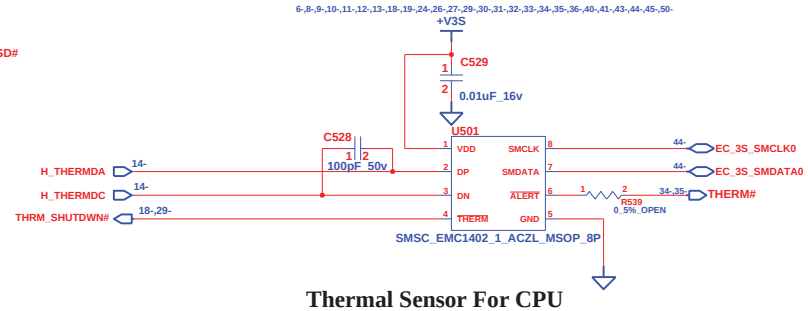

Thermal Sensor For CPU

INVENTEC			
TITLE: TETON THERMAL&FAN CONTROLLER			
SIZE A3	CODE CS	DOC. NUMBER Model_No	REV X01
CHANGE by RD-EE3	7-Oct-2007	SHEET 18 OF 56	

MCH_CFG(5)	LOW=DMIx2 HIGH=DMIx4

MCH_CFG(7) (CPU Strap)	LOW=RSVD HIGH=Mobile CPU

MCH_CFG(9) PCIE Graphics Lane	LOW=Reverse Lane HIGH=Normal operation

MCH_CFG(11) PSB 4X CLK ENABLE	LOW=CALISTOGA HIGH=RESERVED

MCH_CFG(13:12) XOR/ALLZ	00=PARTIAL CLOCK GATING DISABLE 01=XOR MODE ENABLE 10=ALL-Z MODE ENABLE 11=NORMAL OPERATION

MCH_CFG(16) (FSB Dynamic ODT)	LOW=Dynamic ODT Disable HIGH=Dynamic ODT Enable

NOTE: CFG[2:0] STRP : 001b : 533 MT/S
011b : 667 MT/S

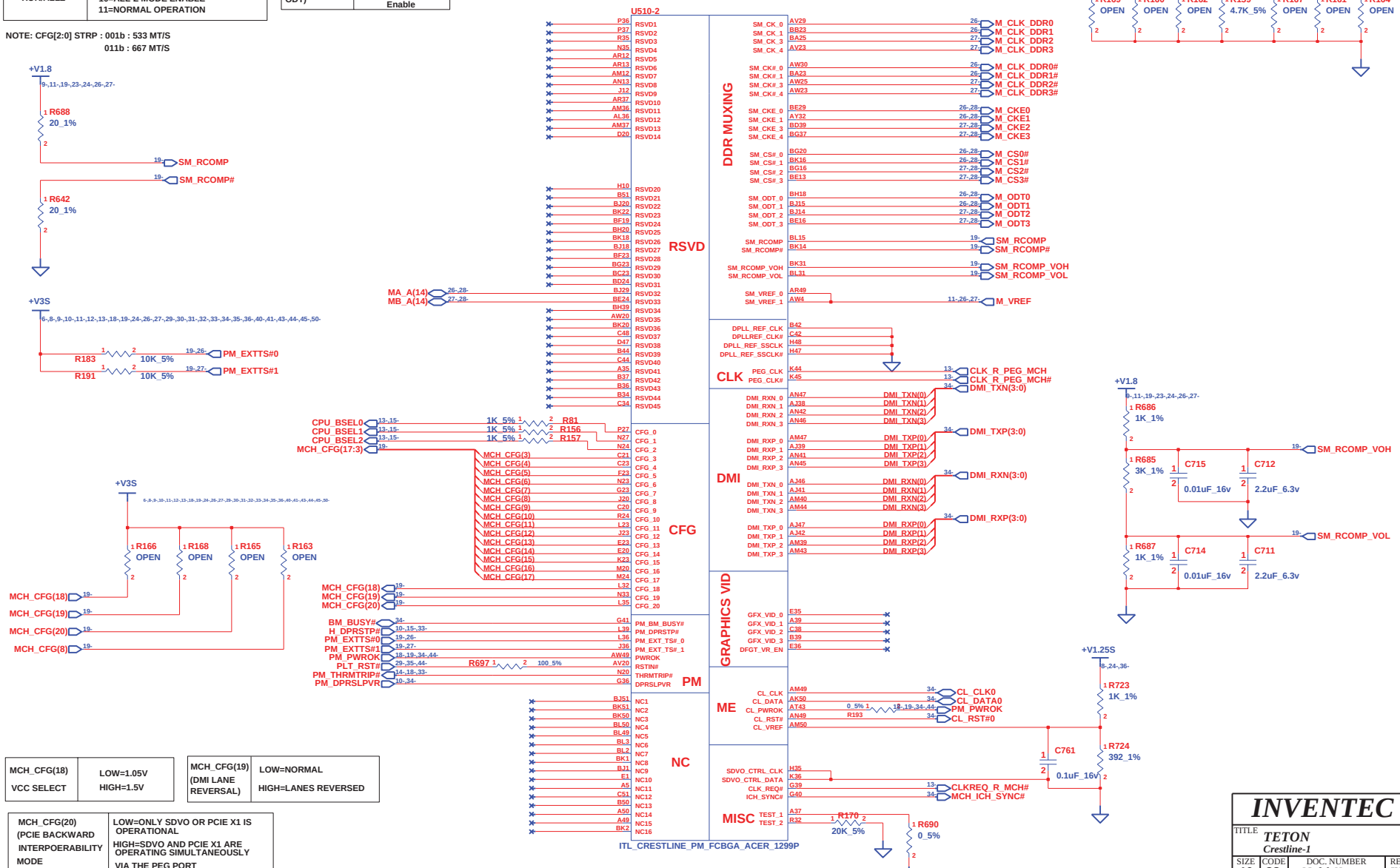

MCH_CFG(18) VCC SELECT	LOW=1.05V HIGH=1.5V

MCH_CFG(19) (DMI LANE REVERSAL)	LOW=NORMAL HIGH=LANES REVERSED

MCH_CFG(20) (PCIE BACKWARD INTERPOERABILITY MODE	LOW=ONLY SDVO OR PCIE X1 IS OPERATIONAL HIGH=SDVO AND PCIE X1 ARE OPERATING SIMULTANEOUSLY VIA THE PEG PORT

INVENTEC

TITLE: TETON
Crestline-1

SIZE	CODE	DOC. NUMBER	REV
A3	CS	Model_No	X01

CHANGE by RD-EE3 28-Nov-2007

SHEET 19 OF 56

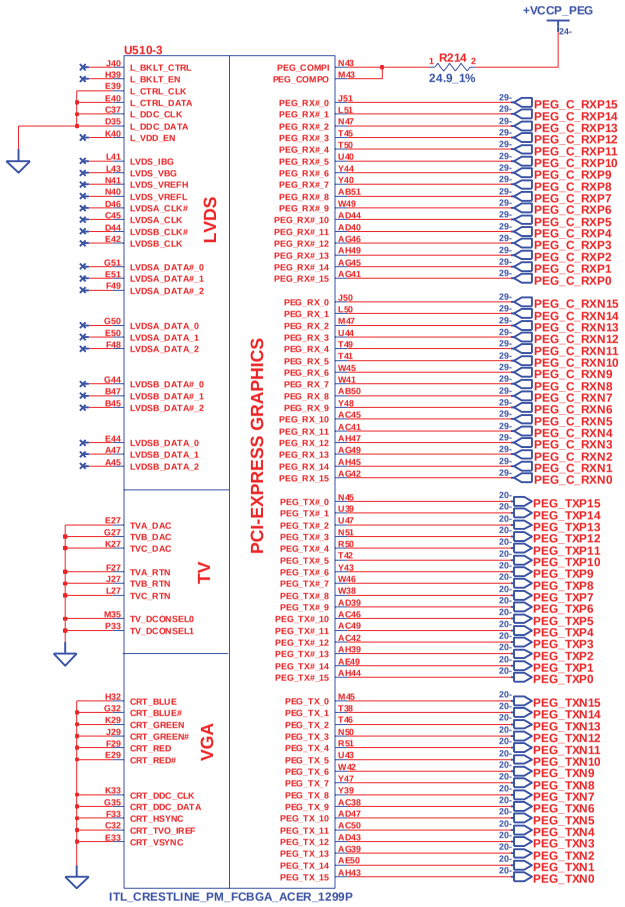

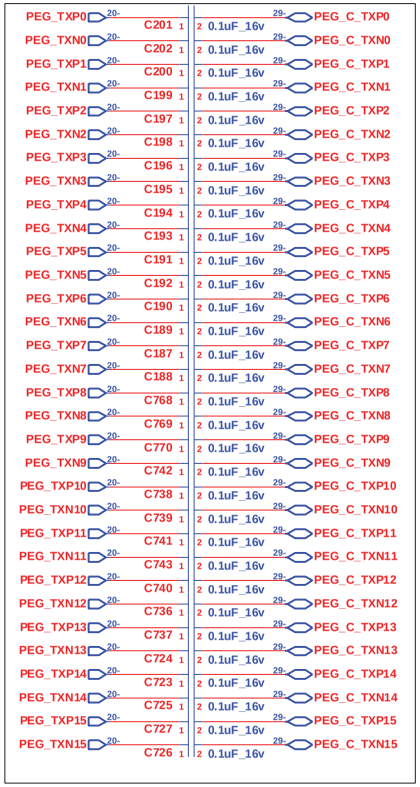

Place to near NB

INVENTEC			
TITLE: TETON Crestline-2			
SIZE: A3	CODE: CS	DOC. NUMBER: Model_No	REV: X01
CHANGE by: RD-EE3	26-Oct-2007	SHEET 20 OF 56	

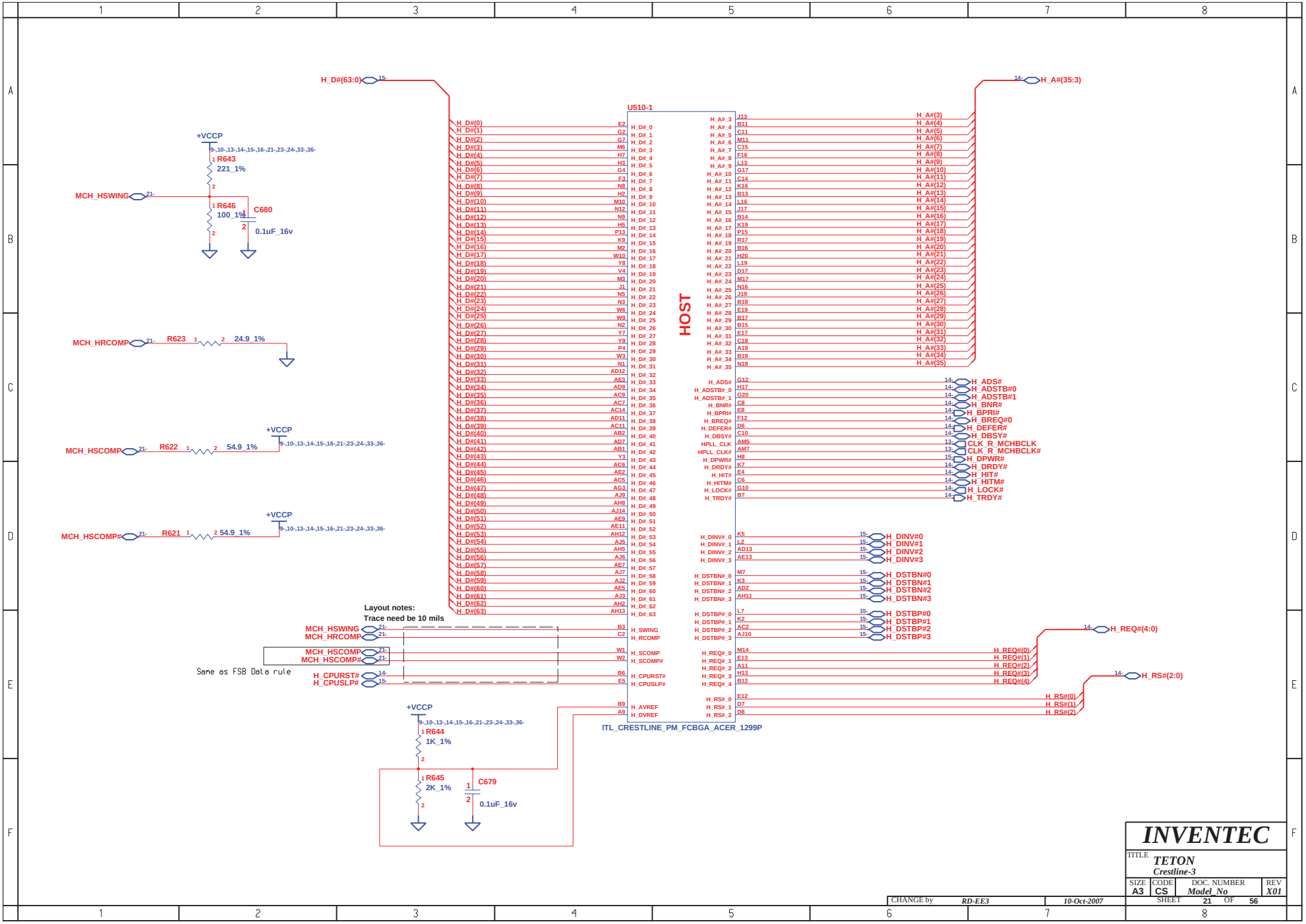

INVENTEC	
TITLE	TETON Crestline-3
SIZE A3	CODE CS
DOC. NUMBER	Model_No
REV	X01
CHANGE by	RD-EE3
10-Oct-2007	
SHEET	21 OF 56

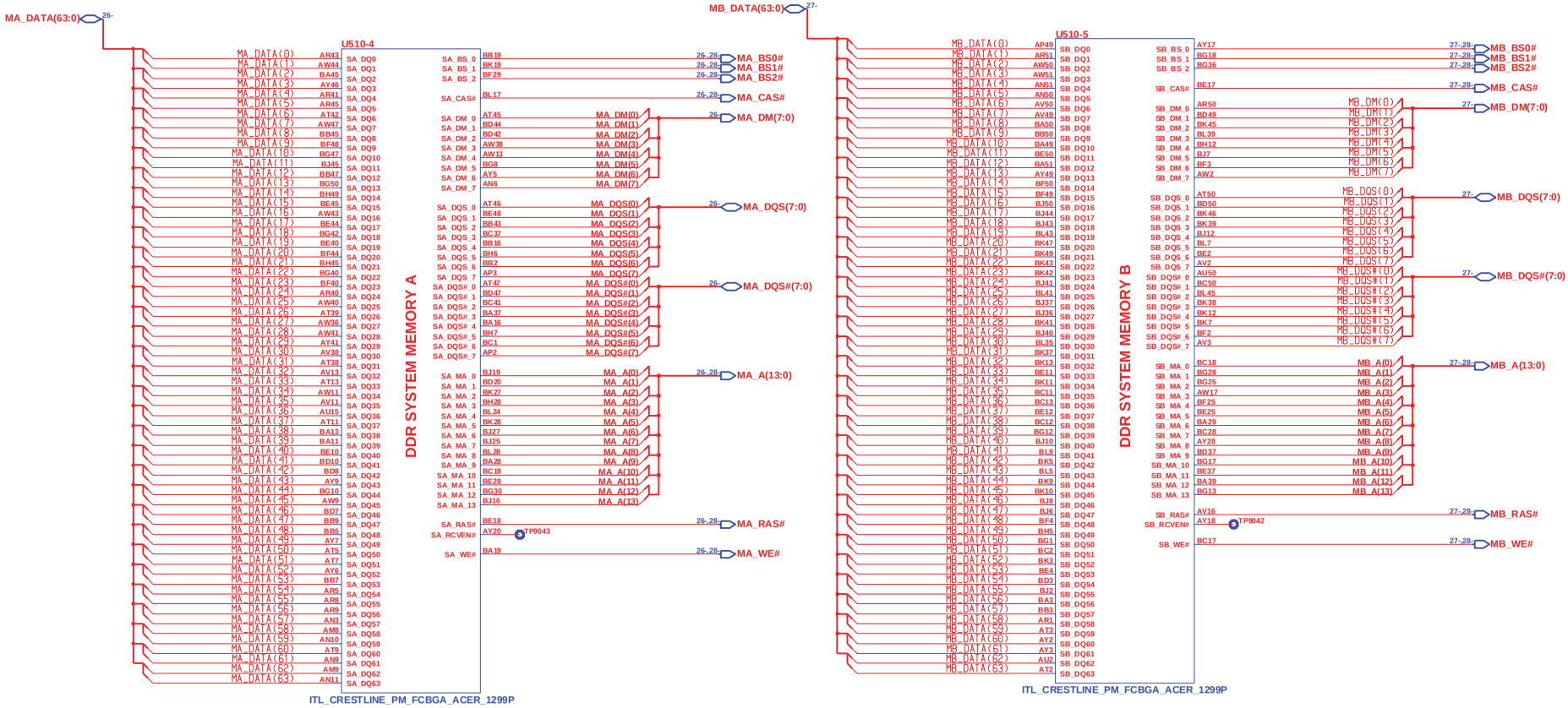

CHANGE by	RD-EE3	11-Oct-2007	

INVENTEC

TITLE **TETON**
Crestline-4

SIZE	CODE	DOC. NUMBER	REV
A3	CS	Model_No	X01

SHEET 22 OF 56

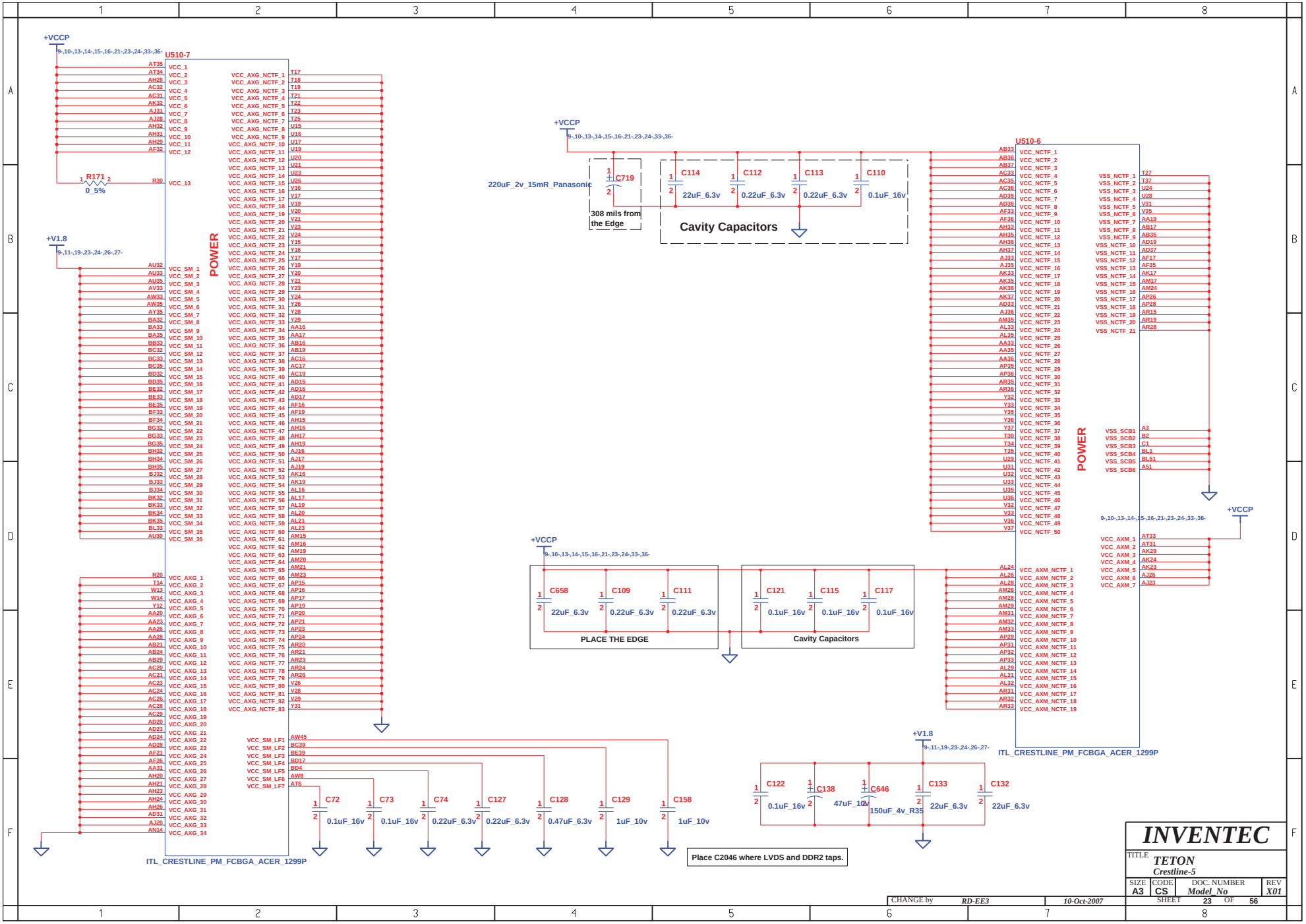
+VCCP
9,-10,-13,-14,-15,-16,-21,-23,-24,-33,-36-
U510-7
R171
0_5%
+V1.8
9,-11,-19,-23,-24,-26,-27-
POWER
ITL_CRESTLINE_PM_FCBGA_ACER_1299P
220uF_2v_15mR_Panasonic
C719
308 mils from the Edge
C114
22uF_6.3v
C112
0.22uF_6.3v
C113
0.22uF_6.3v
C110
0.1uF_16v
Cavity Capacitors
U510-6
C658
22uF_6.3v
C109
0.22uF_6.3v
C111
0.22uF_6.3v
PLACE THE EDGE
C121
0.1uF_16v
C115
0.1uF_16v
C117
0.1uF_16v
Cavity Capacitors
C72
0.1uF_16v
C73
0.1uF_16v
C74
0.22uF_6.3v
C127
0.22uF_6.3v
C128
0.47uF_6.3v
C129
1uF_10v
C158
1uF_10v
C122
0.1uF_16v
C138
47uF_10v
C646
150uF_4v_R35
C133
22uF_6.3v
C132
22uF_6.3v
Place C2046 where LVDS and DDR2 taps.
INVENTEC
TITLE
TETON
Crestline-5
SIZE A3
CODE CS
DOC. NUMBER Model_No
REV X01
CHANGE by RD-EE3
10-Oct-2007
SHEET 23 OF 56

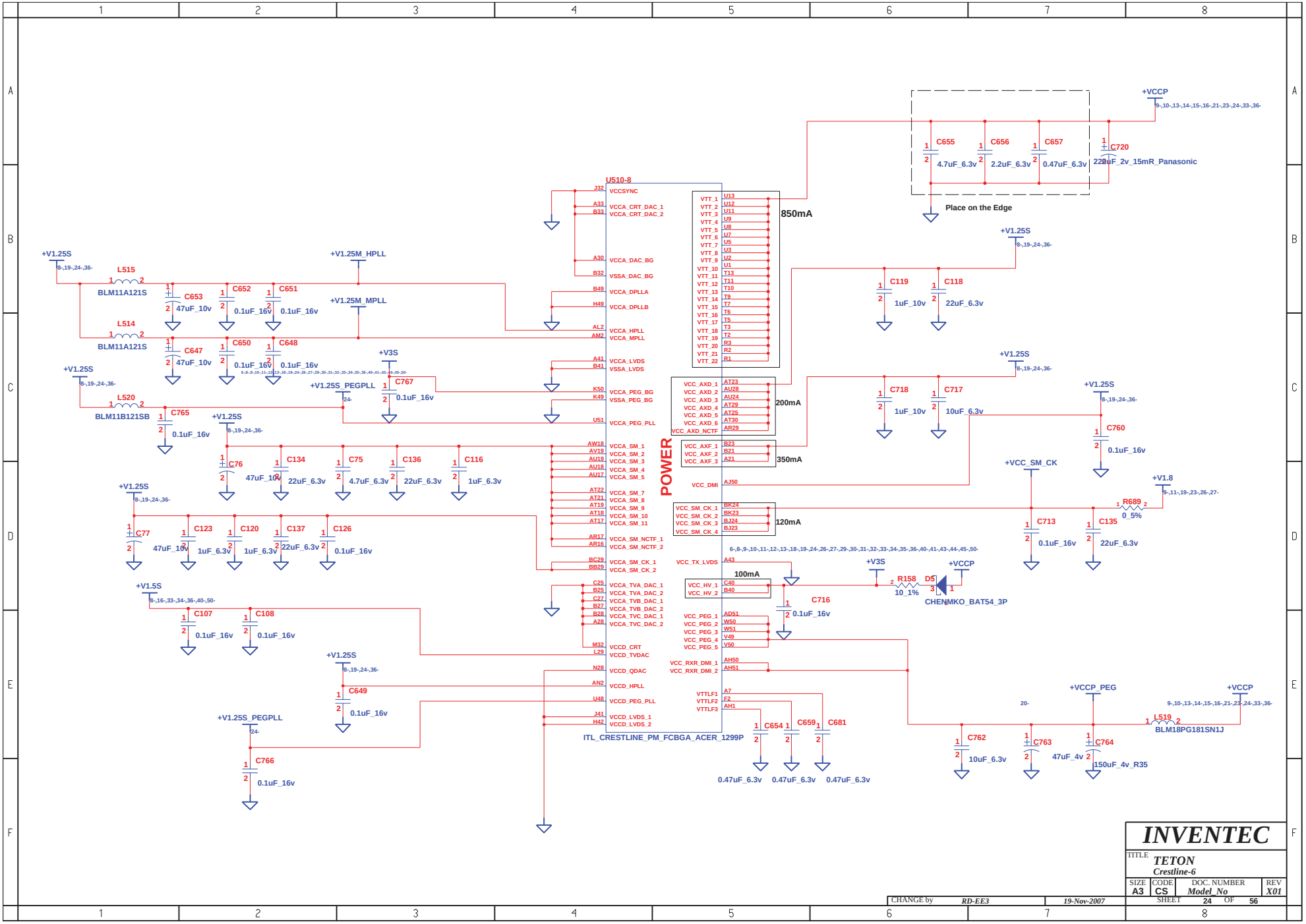

INVENTEC			
TITLE TETON Crestline-6			
SIZE A3	CODE CS	DOC. NUMBER Model_No	REV X01
CHANGE by RD-EE3	19-Nov-2007	SHEET 24 OF 56	

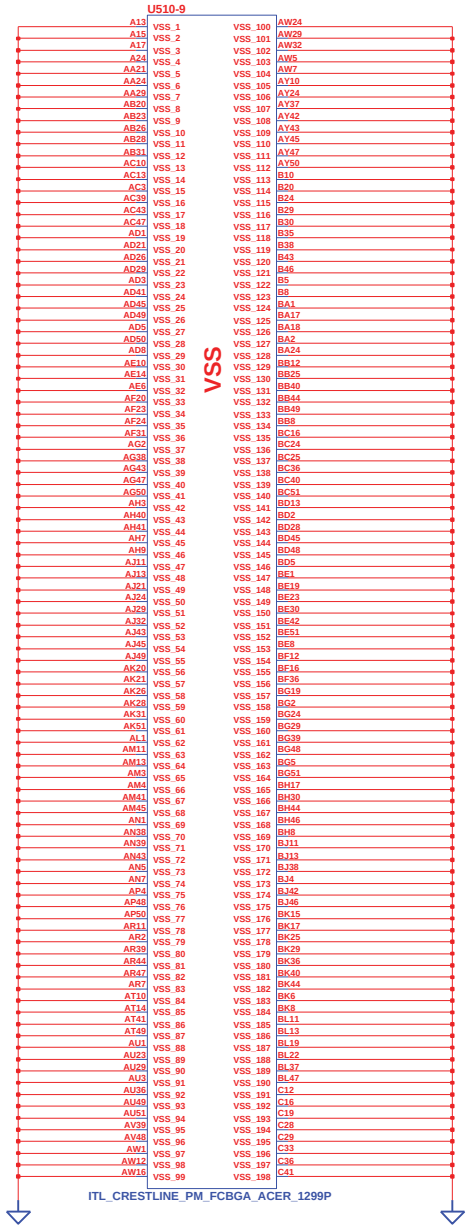

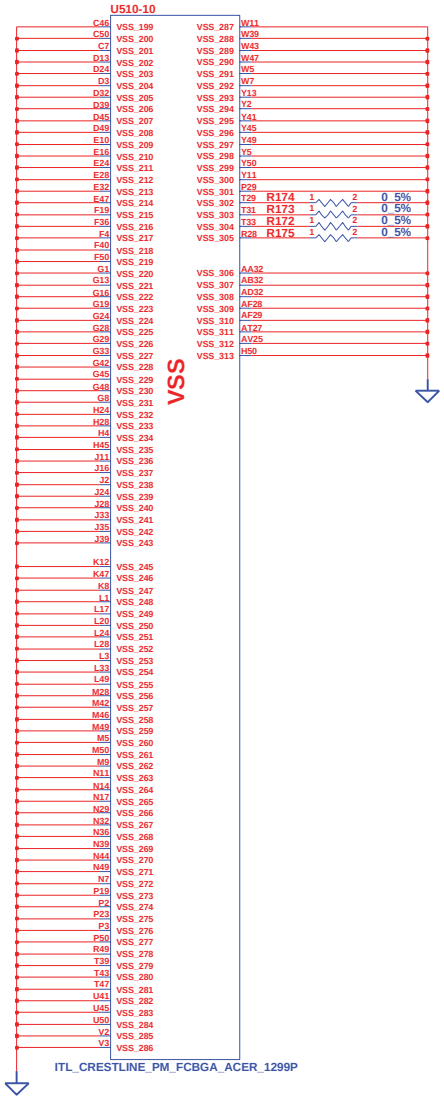

INVENTEC			
TITLE TETON Crestline-7			
SIZE A3	CODE CS	DOC. NUMBER Model_No	REV X01
CHANGE by RD-EE3	7-Oct-2007	SHEET 25 OF 56	

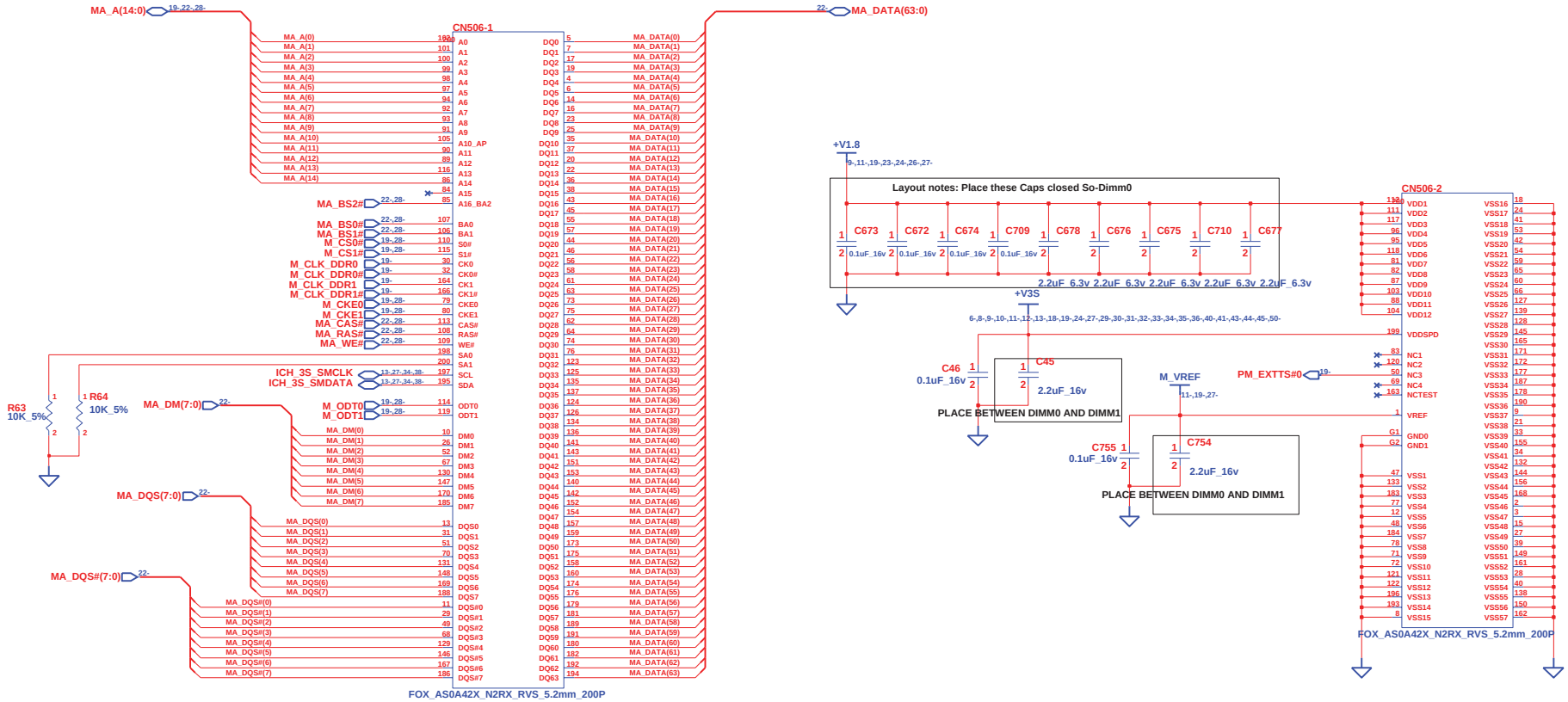

DDR2 SODIMM0

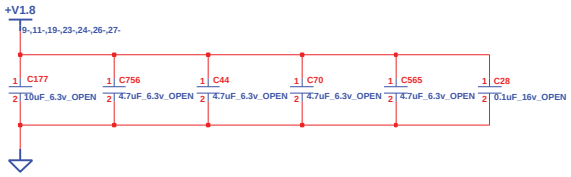

CHANGE by	RD-EE3	26-Oct-2007	

INVENTEC

TITLE: TETON DDR2-DIMM-0

SIZE	CODE	DOC. NUMBER	REV
A3	CS	Model_No	X01

SHEET 26 OF 56

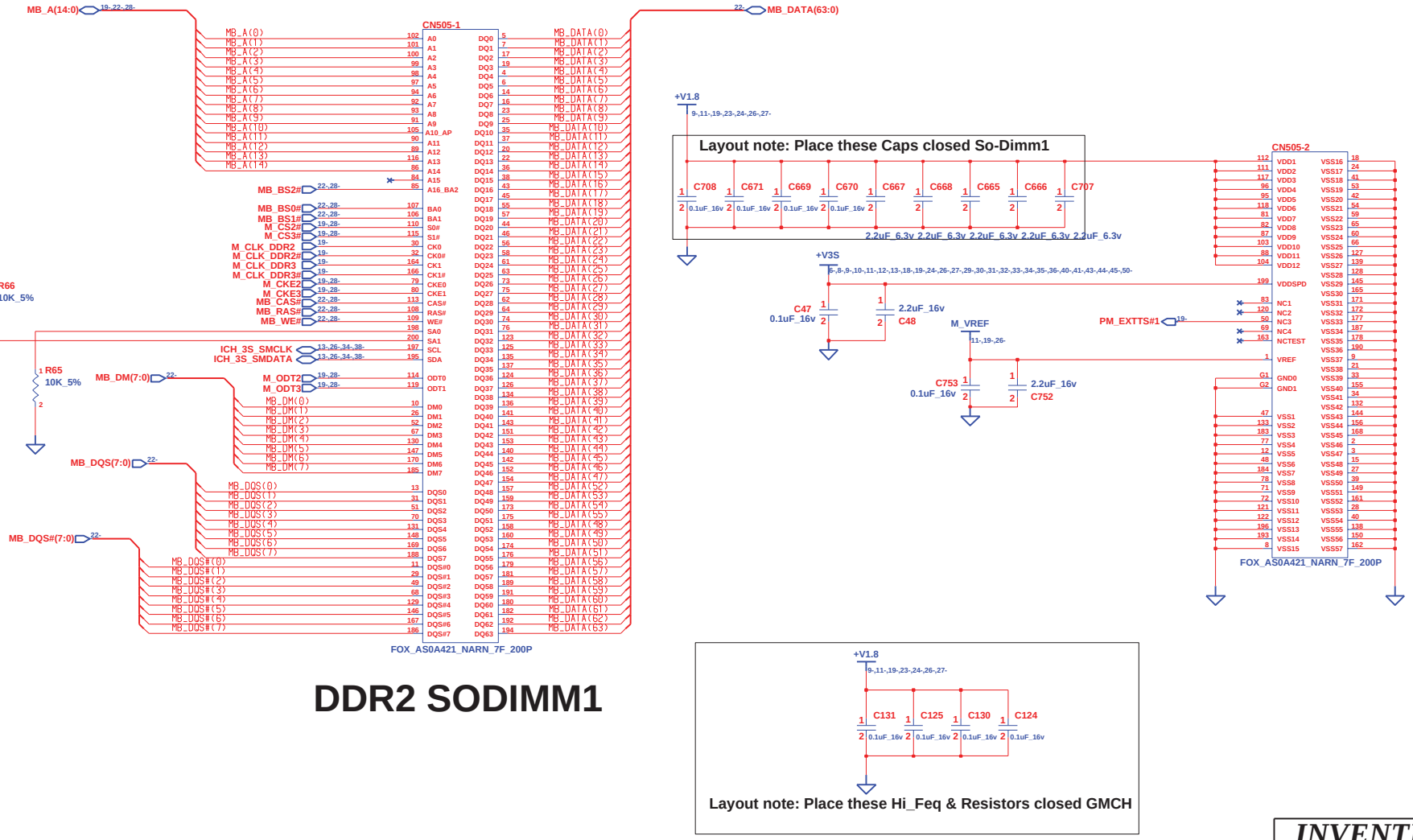

DDR2 SODIMM1

+V1.8

C131 C125 C130 C124

0.1uF_16v

Layout note: Place these Hi_Feq & Resistors closed GMCH

INVENTEC			
TITLE TETON DDR2-DIMM-1			
SIZE A3	CODE CS	DOC. NUMBER Model_No	REV X01
CHANGE by RD-EE3	26-Oct-2007	SHEET 27 OF 56	

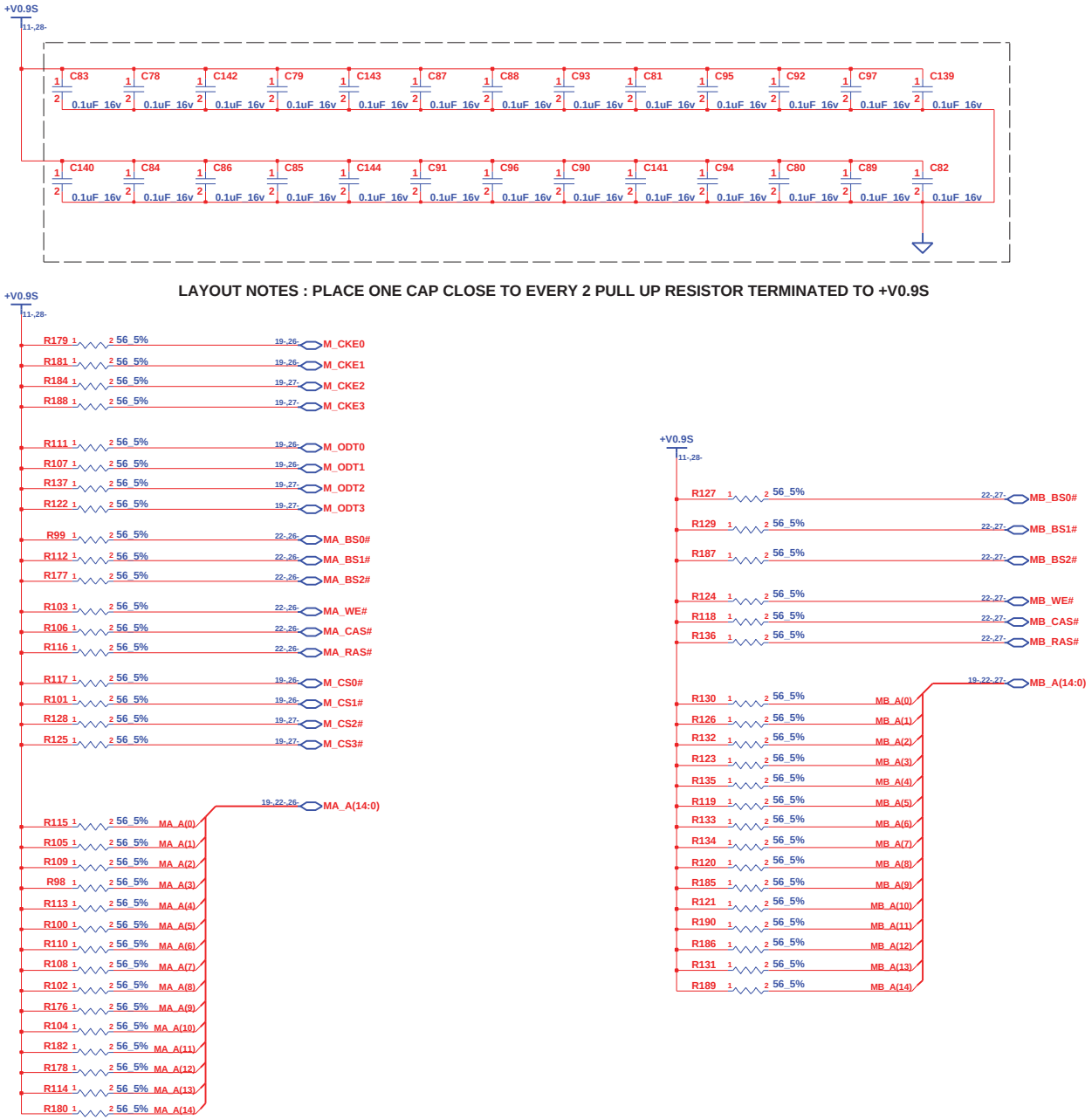

INVENTEC			
TITLE TETON DDR2-DAMPING			
SIZE A3	CODE CS	DOC. NUMBER Model_No	REV X01
CHANGE by RD-EE3	10-Oct-2007	SHEET 28 OF 56	

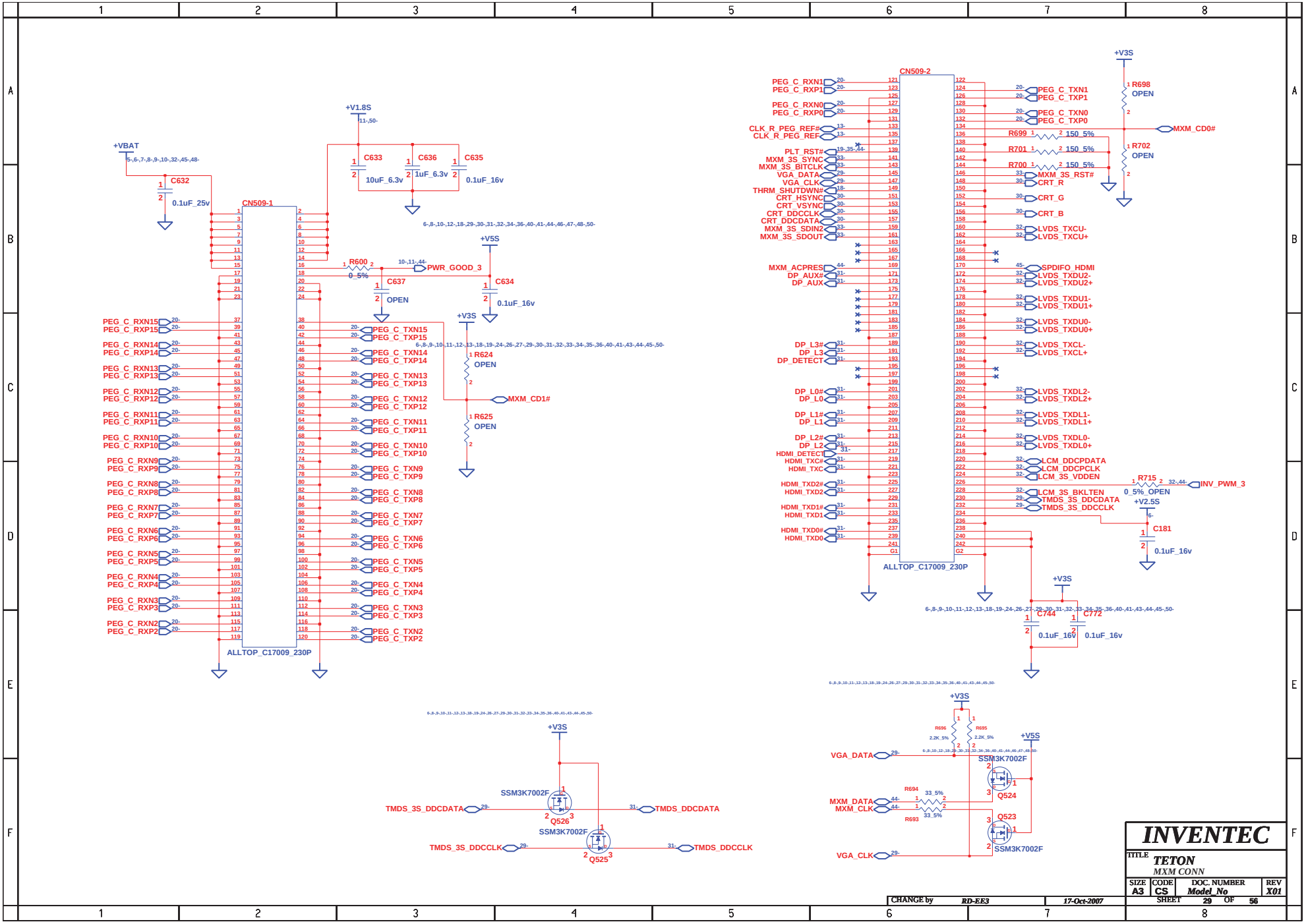

INVENTEC

TITLE TETON
MXM CONN

SIZE	CODE	DOC. NUMBER	REV
A3	CS	Model_No	X01

CHANGE by RD-EE3 17-Oct-2007 SHEET 29 OF 56

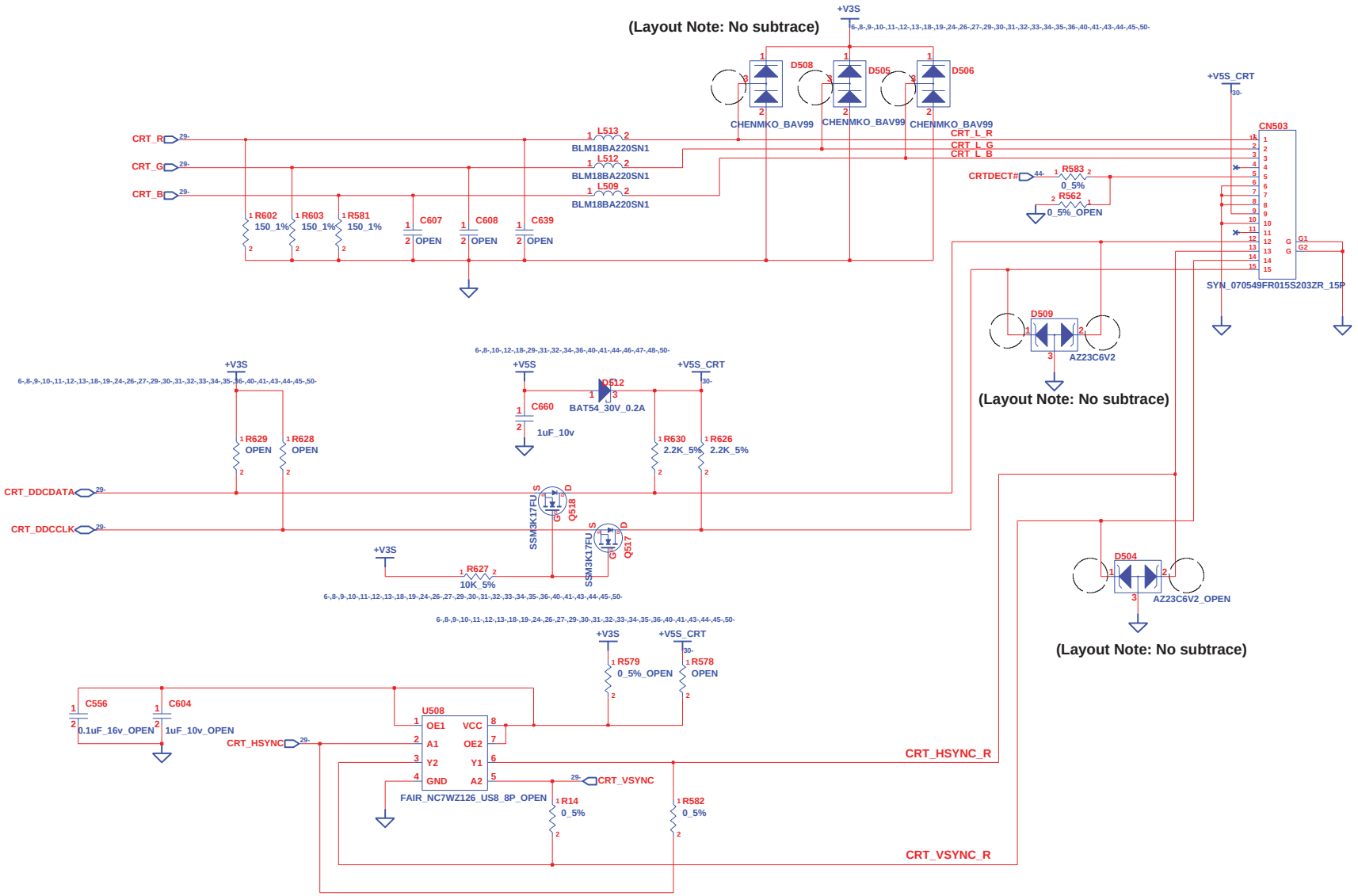

CHANGE by	RD-EE3	3-Dec-2007	

INVENTEC

TITLE: *TETON*
CRT INTERFACE

SIZE	CODE	DOC. NUMBER	REV
A3	CS	*Model_No*	*X01*

SHEET 30 OF 56

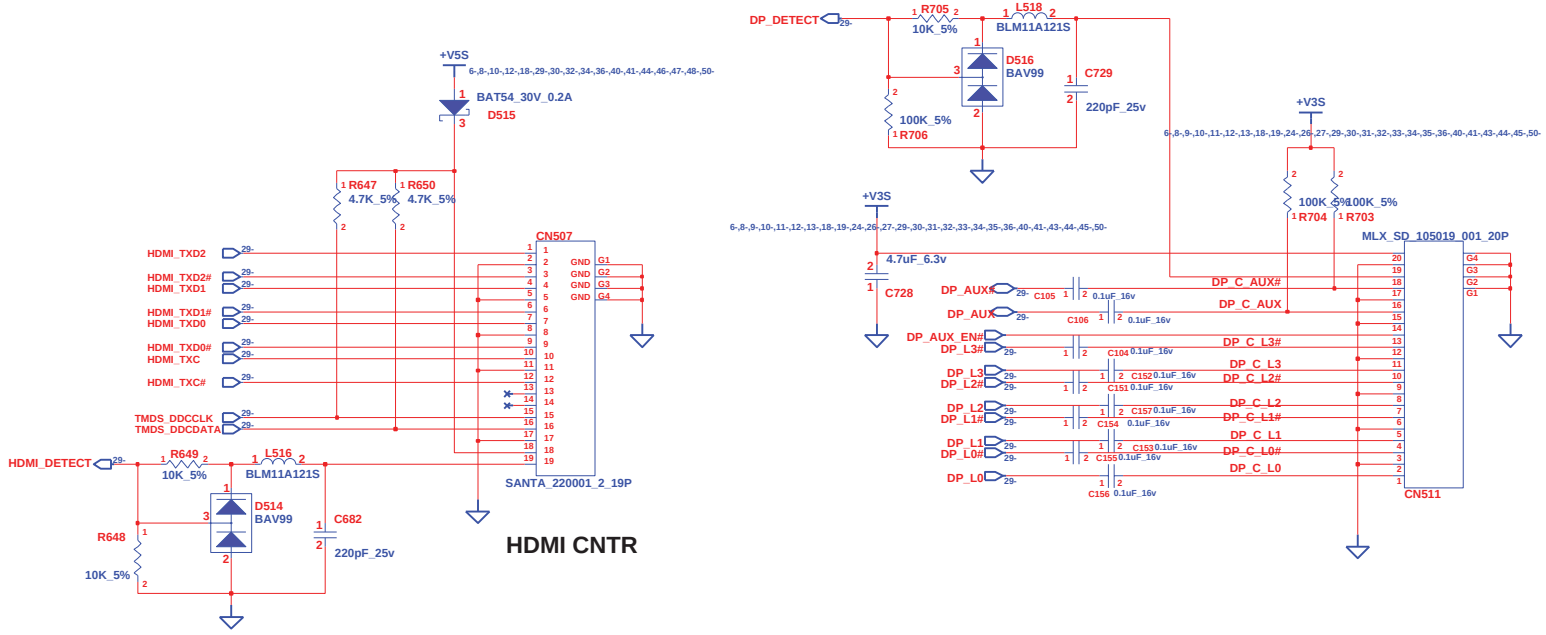

CHANGE by	RD-EE3	29-Oct-2007	

INVENTEC

TITLE **TETON**

SIZE A3 | CODE CS | DOC. NUMBER Model_No | REV X01

SHEET 31 OF 56

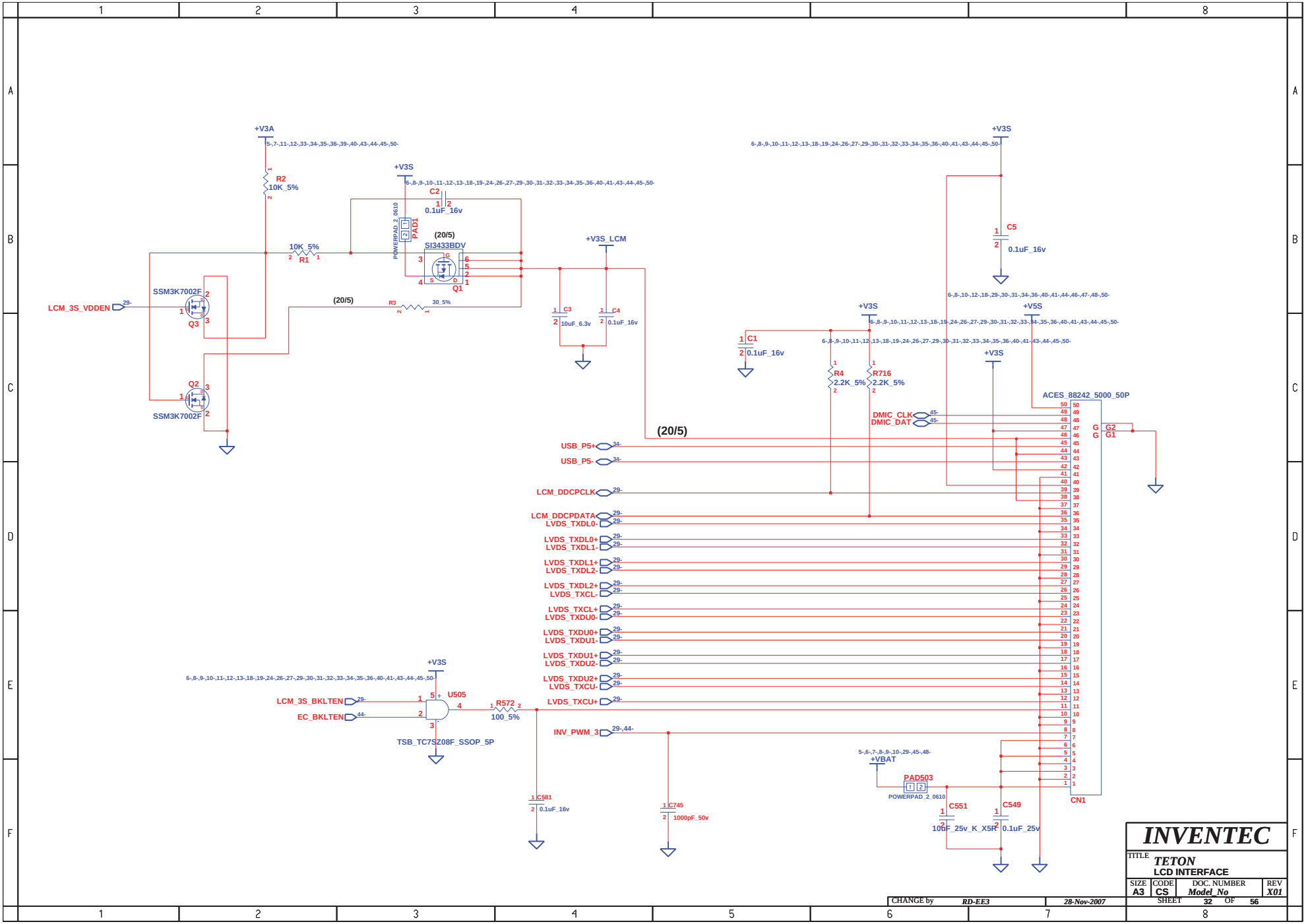
+V3A
R2
10K_5%
+V3S
C2
0.1uF_16v
POWERPAD_2_0610
PAD1
(20/5)
SI3433BDV
Q1
10K_5%
R1
LCM_3S_VDDEN
SSM3K7002F
Q3
Q2
SSM3K7002F
(20/5)
R3
30_5%
+V3S_LCM
C3
10uF_6.3v
C4
0.1uF_16v
+V3S
C5
0.1uF_16v
+V3S
C1
0.1uF_16v
R4
2.2K_5%
R716
2.2K_5%
+V5S
+V3S
ACES_88242_5000_50P
DMIC_CLK
DMIC_DAT
(20/5)
USB_P5+
USB_P5-
LCM_DDCPCLK
LCM_DDCPDATA
LVDS_TXDL0-
LVDS_TXDL0+
LVDS_TXDL1-
LVDS_TXDL1+
LVDS_TXDL2-
LVDS_TXDL2+
LVDS_TXCL-
LVDS_TXCL+
LVDS_TXDU0-
LVDS_TXDU0+
LVDS_TXDU1-
LVDS_TXDU1+
LVDS_TXDU2-
LVDS_TXDU2+
LVDS_TXCU-
LVDS_TXCU+
INV_PWM_3
G G2
G G1
CN1
+V3S
LCM_3S_BKLTEN
EC_BKLTEN
U505
TSB_TC7SZ08F_SSOP_5P
R572
100_5%
C581
0.1uF_16v
C745
1000pF_50v
+VBAT
PAD503
POWERPAD_2_0610
C551
100uF_25v_K_X5R
C549
0.1uF_25v
INVENTEC
TITLE
TETON
LCD INTERFACE
SIZE A3
CODE CS
DOC. NUMBER Model_No
REV X01
CHANGE by RD-EE3
28-Nov-2007
SHEET 32 OF 56

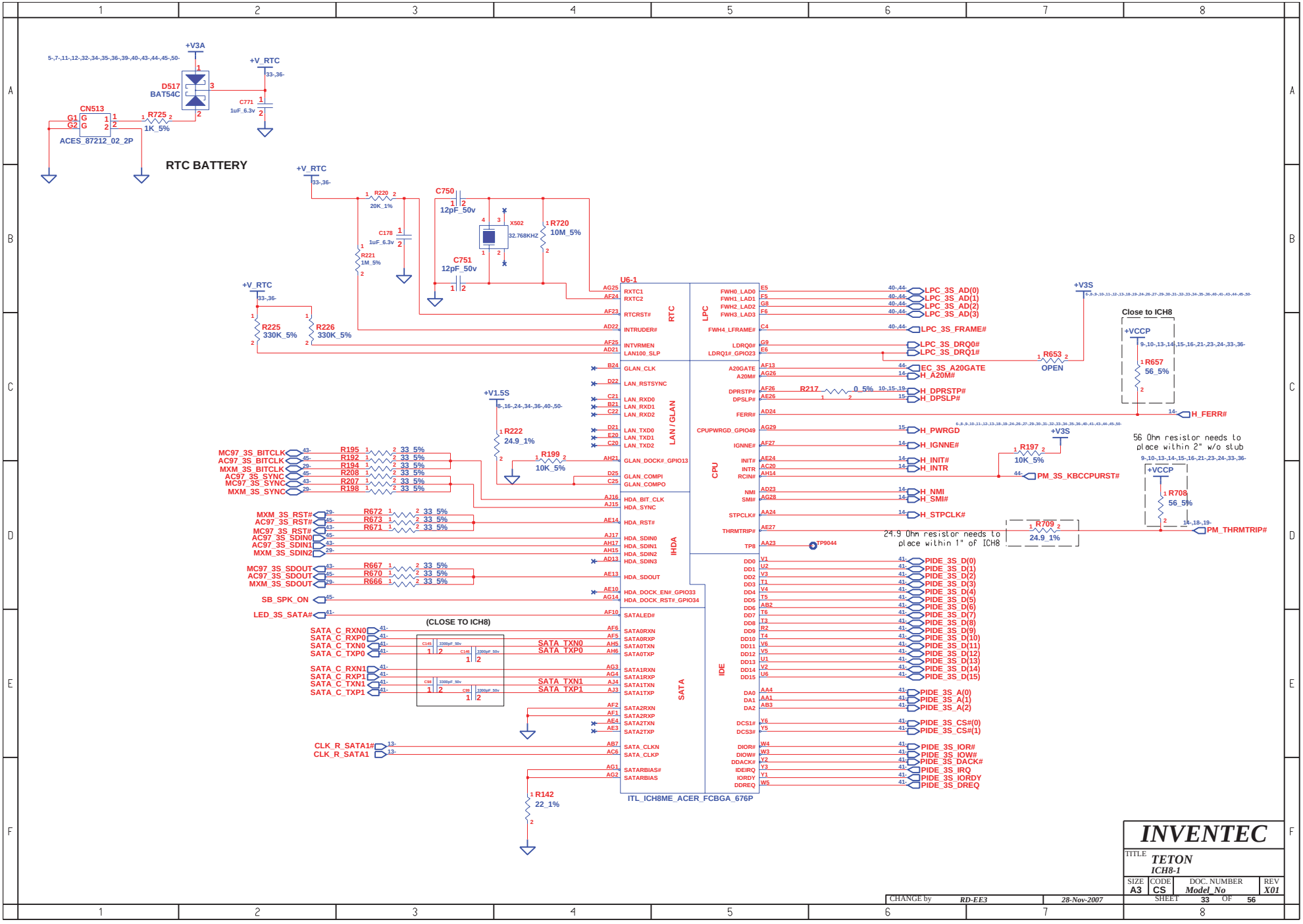
RTC BATTERY
+V3A
+V_RTC
D517
BAT54C
C771
1uF_6.3V
CN513
ACES_87212_02_2P
R725
1K_5%
R220
20K_1%
C178
1uF_6.3V
R221
1M_5%
C750
12pF_50v
C751
12pF_50v
X502
32.768KHZ
R720
10M_5%
R225
330K_5%
R226
330K_5%
U6-1
ITL_ICH8ME_ACER_FCBGA_676P
RTC
LPC
LAN / GLAN
CPU
IHDA
SATA
IDE
+V1.5S
R222
24.9_1%
R199
10K_5%
(CLOSE TO ICH8)
R142
22_1%
+V3S
R653
OPEN
Close to ICH8
+VCCP
R657
56_5%
R217
0_5%
R197
10K_5%
56 Ohm resistor needs to place within 2" w/o stub
R708
56_5%
R709
24.9_1%
24.9 Ohm resistor needs to place within 1" of ICH8
TP9044
INVENTEC
TITLE
TETON
ICH8-1
SIZE A3
CODE CS
DOC. NUMBER Model_No
REV X01
CHANGE by RD-EE3
28-Nov-2007
SHEET 33 OF 56

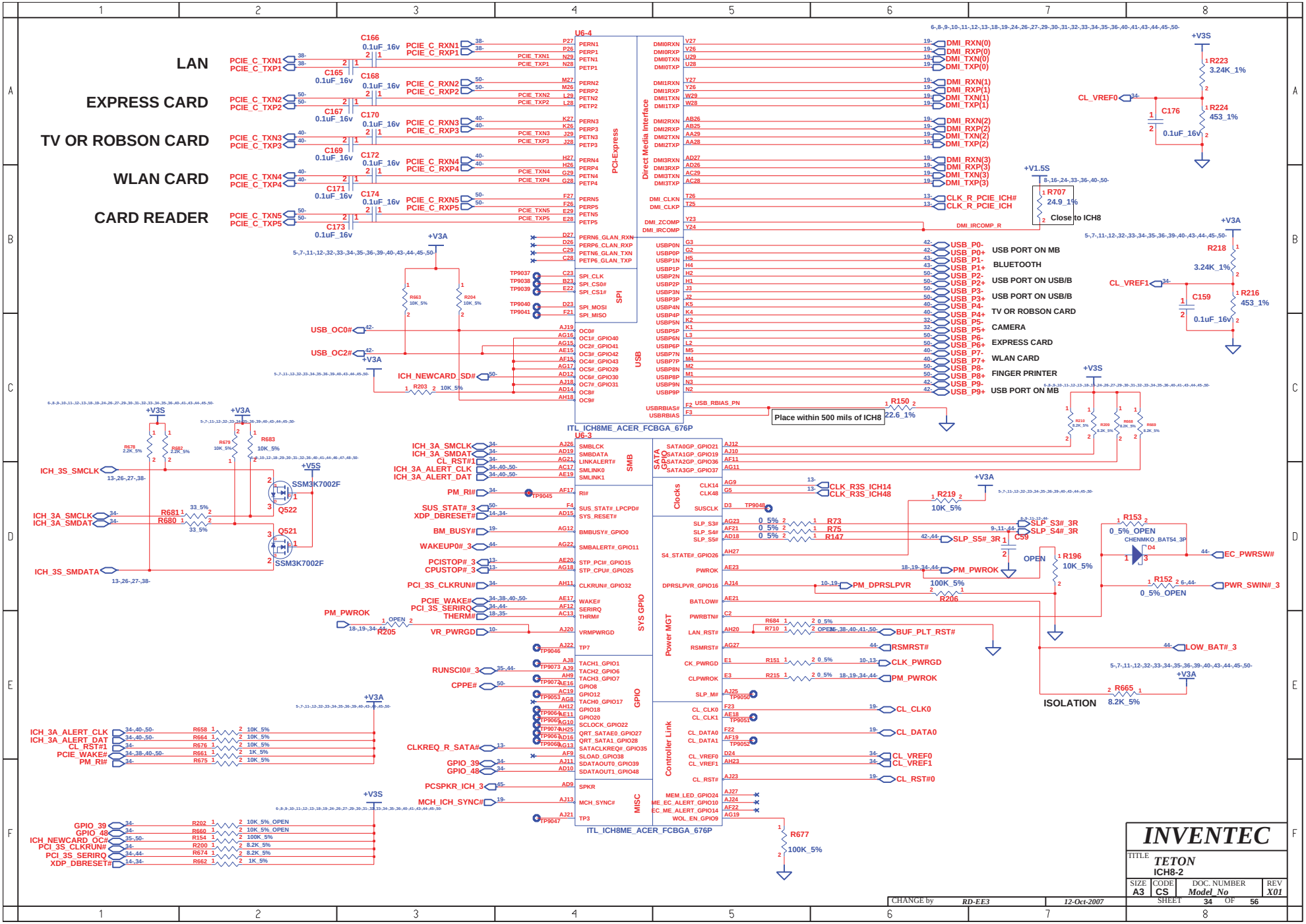
LAN
EXPRESS CARD
TV OR ROBSON CARD
WLAN CARD
CARD READER
U6-4
PCI-Express
Direct Media Interface
SPI
USB
ITL_ICH8ME_ACER_FCBGA_676P
U6-3
SMB
SATA GPIO
Clocks
Power MGT
SYS GPIO
GPIO
Controller Link
MISC
USB PORT ON MB
BLUETOOTH
USB PORT ON USB/B
USB PORT ON USB/B
TV OR ROBSON CARD
CAMERA
EXPRESS CARD
WLAN CARD
FINGER PRINTER
USB PORT ON MB
Close to ICH8
Place within 500 mils of ICH8
ISOLATION
INVENTEC
TITLE
TETON
ICH8-2
SIZE A3
CODE CS
DOC. NUMBER Model_No
REV X01
CHANGE by RD-EE3
12-Oct-2007
SHEET 34 OF 56

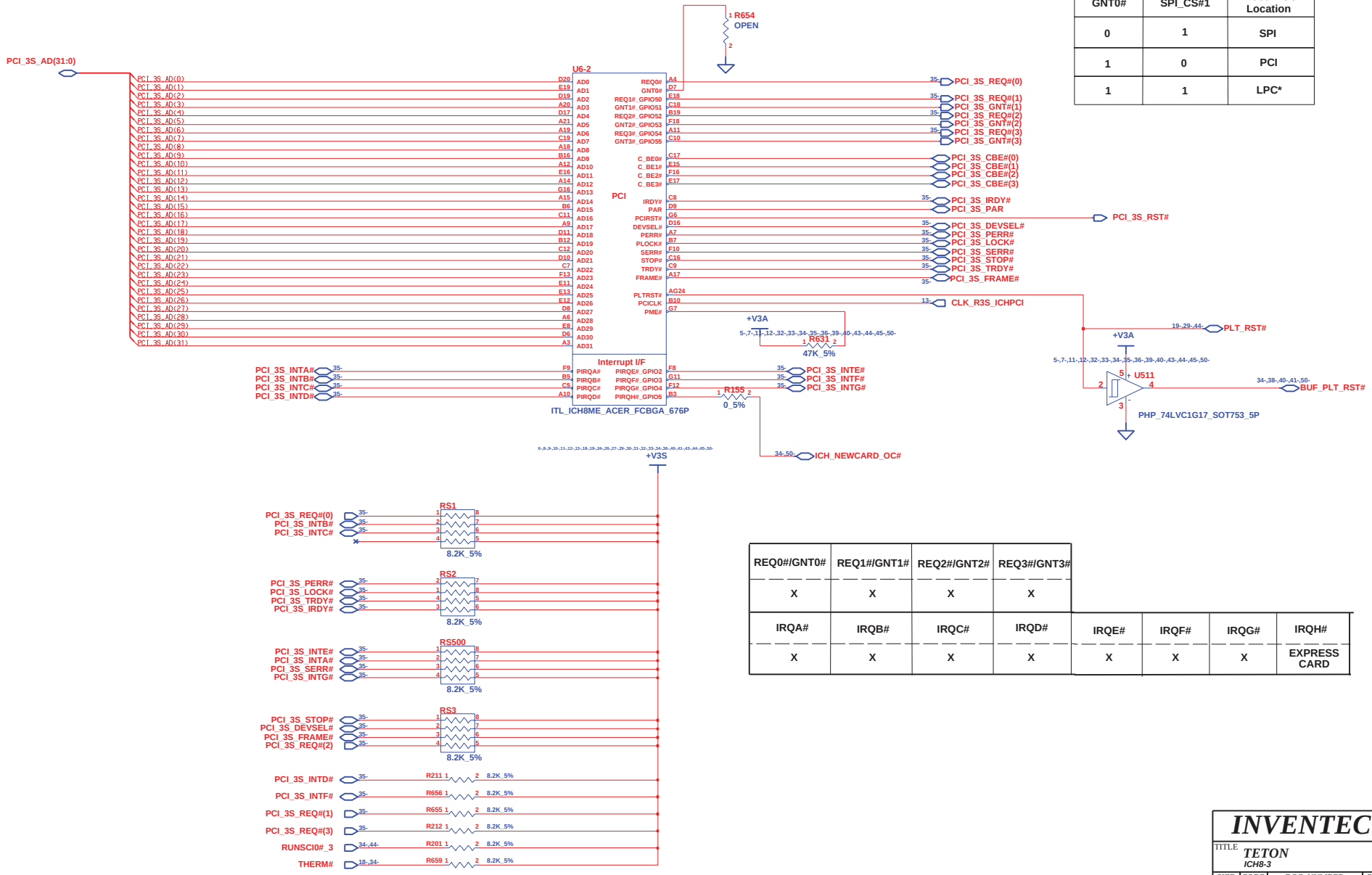

BOOT BIOS STRAP

GNT0#	SPI_CS#1	Boot BIOS Location
0	1	SPI
1	0	PCI
1	1	LPC*

REQ0#/GNT0#	REQ1#/GNT1#	REQ2#/GNT2#	REQ3#/GNT3#
X	X	X	X

IRQA#	IRQB#	IRQC#	IRQD#	IRQE#	IRQF#	IRQG#	IRQH#
X	X	X	X	X	X	X	EXPRESS CARD

INVENTEC

TITLE: TETON
ICH8-3

SIZE	CODE	DOC. NUMBER	REV
A3	CS	Model_No	X01

CHANGE by RD-EE3 | 7-Oct-2007 | SHEET 35 OF 56

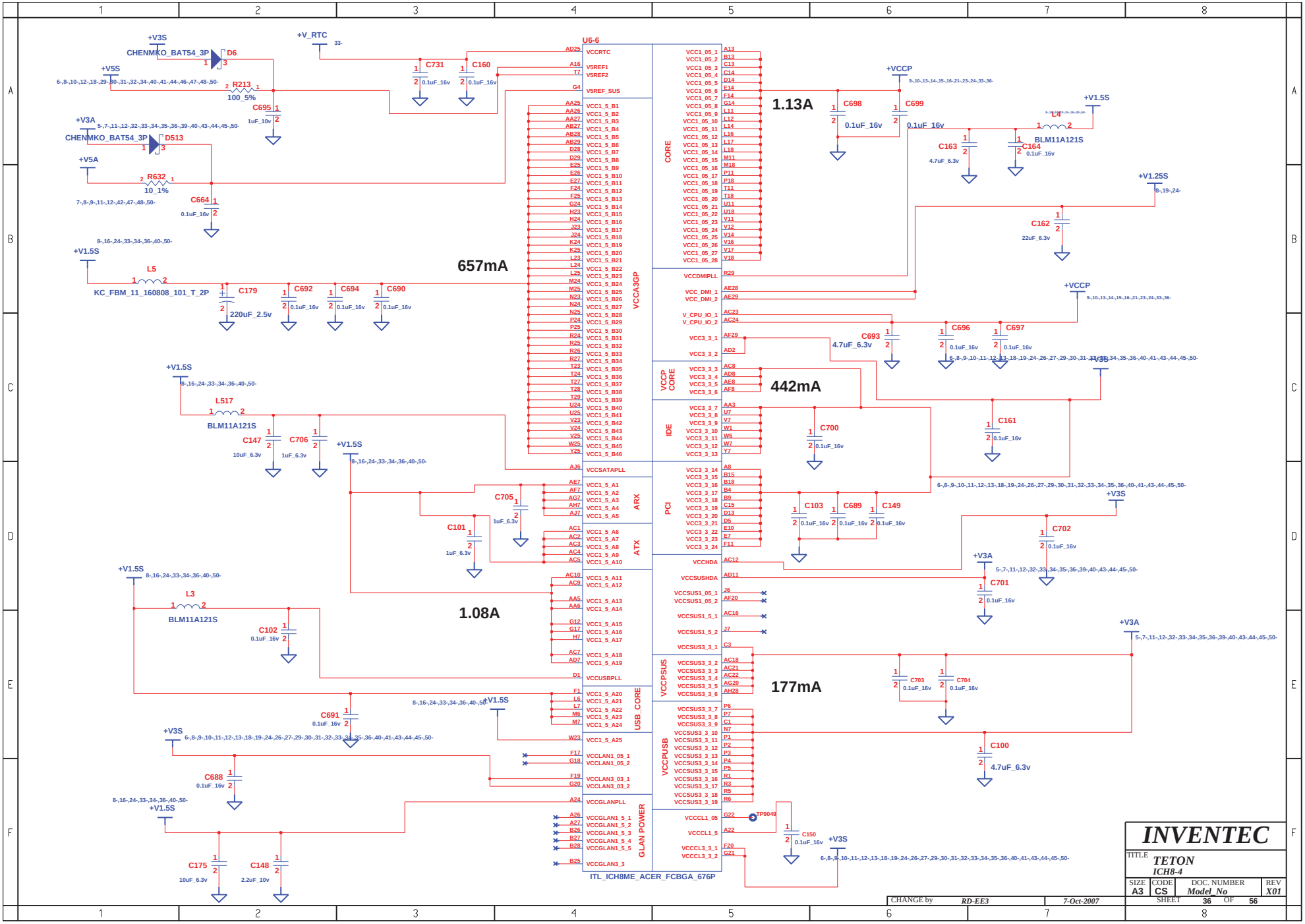
U6-6
ITL_ICH8ME_ACER_FCBGA_676P
CORE
VCCA3GP
VCCP CORE
IDE
PCI
ARX
ATX
USB_CORE
VCCPSUS
VCCPUSB
GLAN POWER
1.13A
657mA
442mA
1.08A
177mA
+V3S
CHENMKO_BAT54_3P
D6
+V5S
R213
100_5%
+V_RTC
C731
C160
C695
+V3A
CHENMKO_BAT54_3P
D513
+V5A
R632
10_1%
C664
+V1.5S
L5
KC_FBM_11_160808_101_T_2P
C179
220uF_2.5v
C692
C694
C690
L517
BLM11A121S
C147
C706
C705
C101
L3
BLM11A121S
C102
C691
C688
C175
C148
+VCCP
C698
C699
0.1uF_16v
C163
4.7uF_6.3v
L4
BLM11A121S
C164
+V1.25S
C162
22uF_6.3v
C693
4.7uF_6.3v
C696
C697
C700
C161
C103
C689
C149
C702
C701
C703
C704
C100
4.7uF_6.3v
C150
TP9049
INVENTEC
TITLE
TETON
ICH8-4
SIZE A3
CODE CS
DOC. NUMBER Model_No
REV X01
CHANGE by RD-EE3
7-Oct-2007
SHEET 36 OF 56

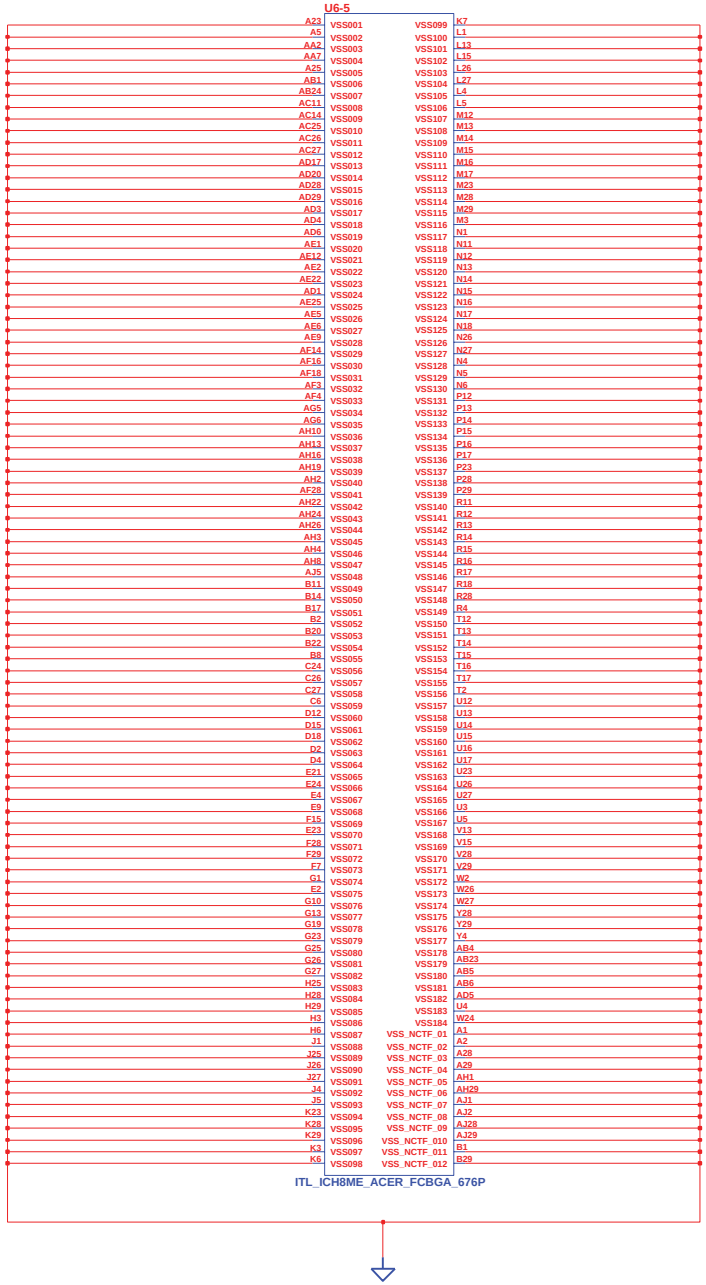

INVENTEC			
TITLE TETON ICH8-5			
SIZE A3	CODE CS	DOC. NUMBER Model_No	REV X01
CHANGE by RD-EE3	7-Oct-2007	SHEET 37 OF 56	

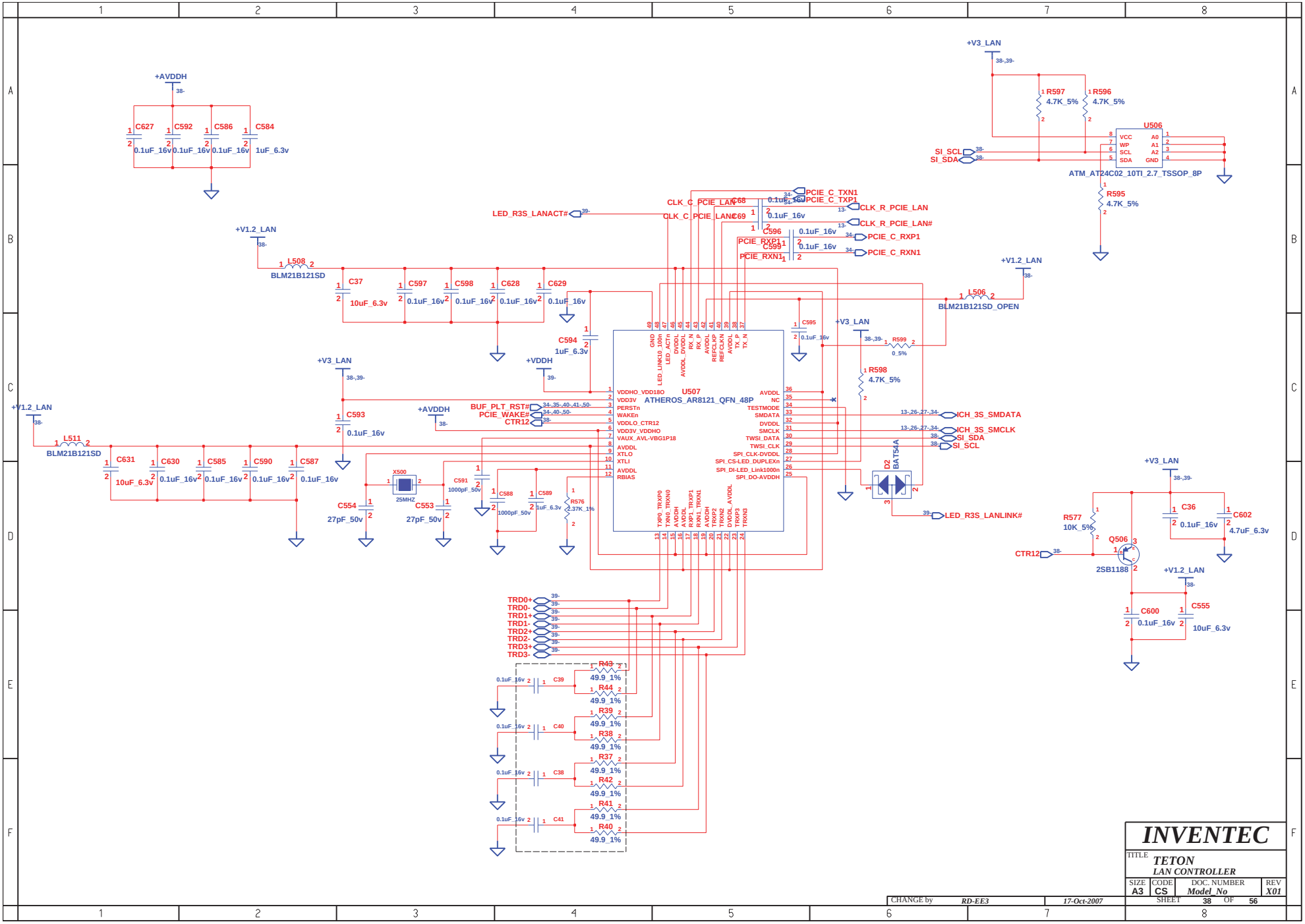

INVENTEC

TITLE TETON
LAN CONTROLLER

SIZE	CODE	DOC. NUMBER	REV
A3	CS	Model_No	X01

CHANGE by RD-EE3 17-Oct-2007

SHEET 38 OF 56

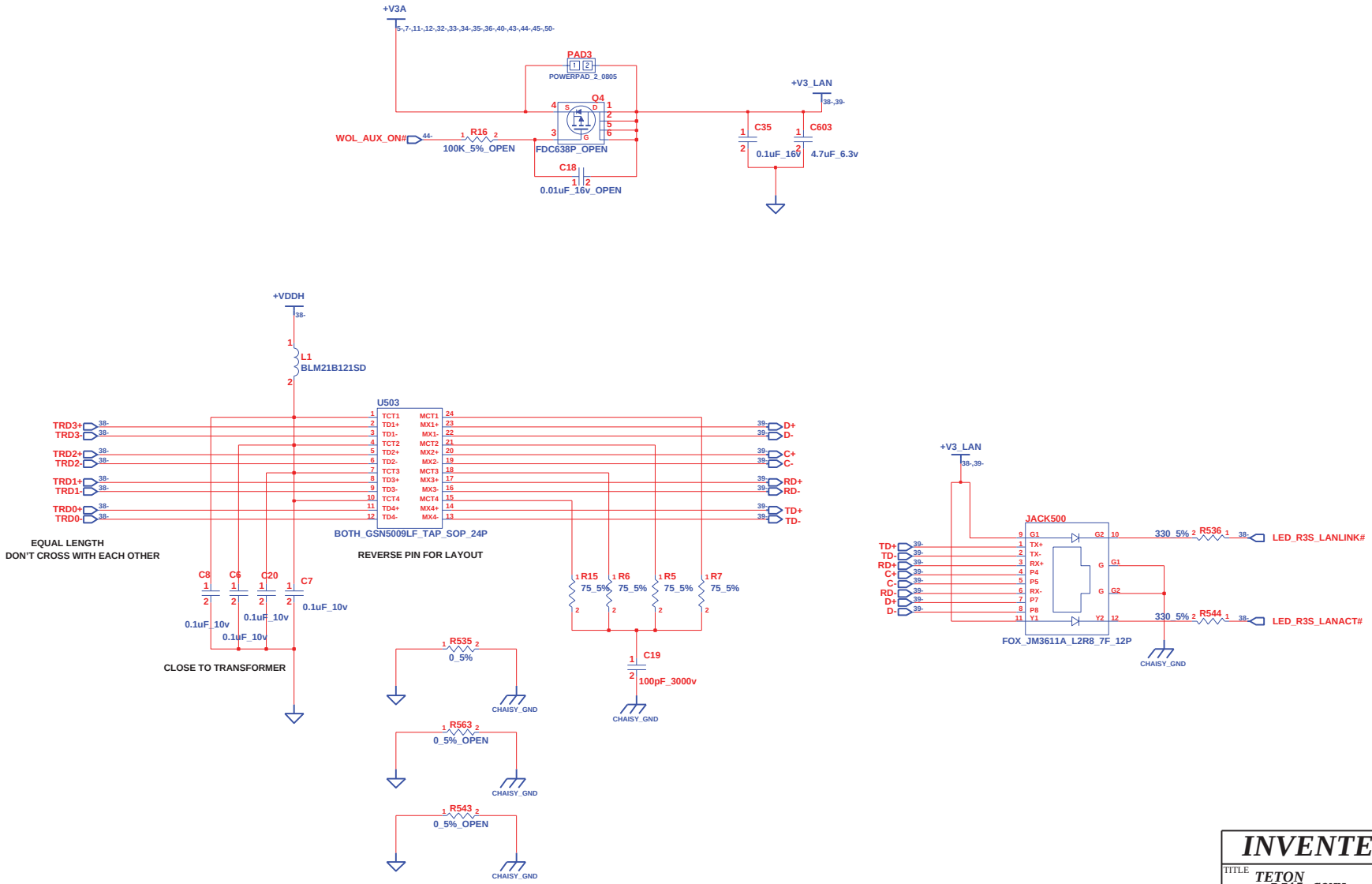

INVENTEC

TITLE TETON RJ45 CONN

SIZE	CODE	DOC. NUMBER	REV
A3	CS	Model_No	X01

CHANGE by RD-EE3 11-Oct-2007

SHEET 39 OF 56

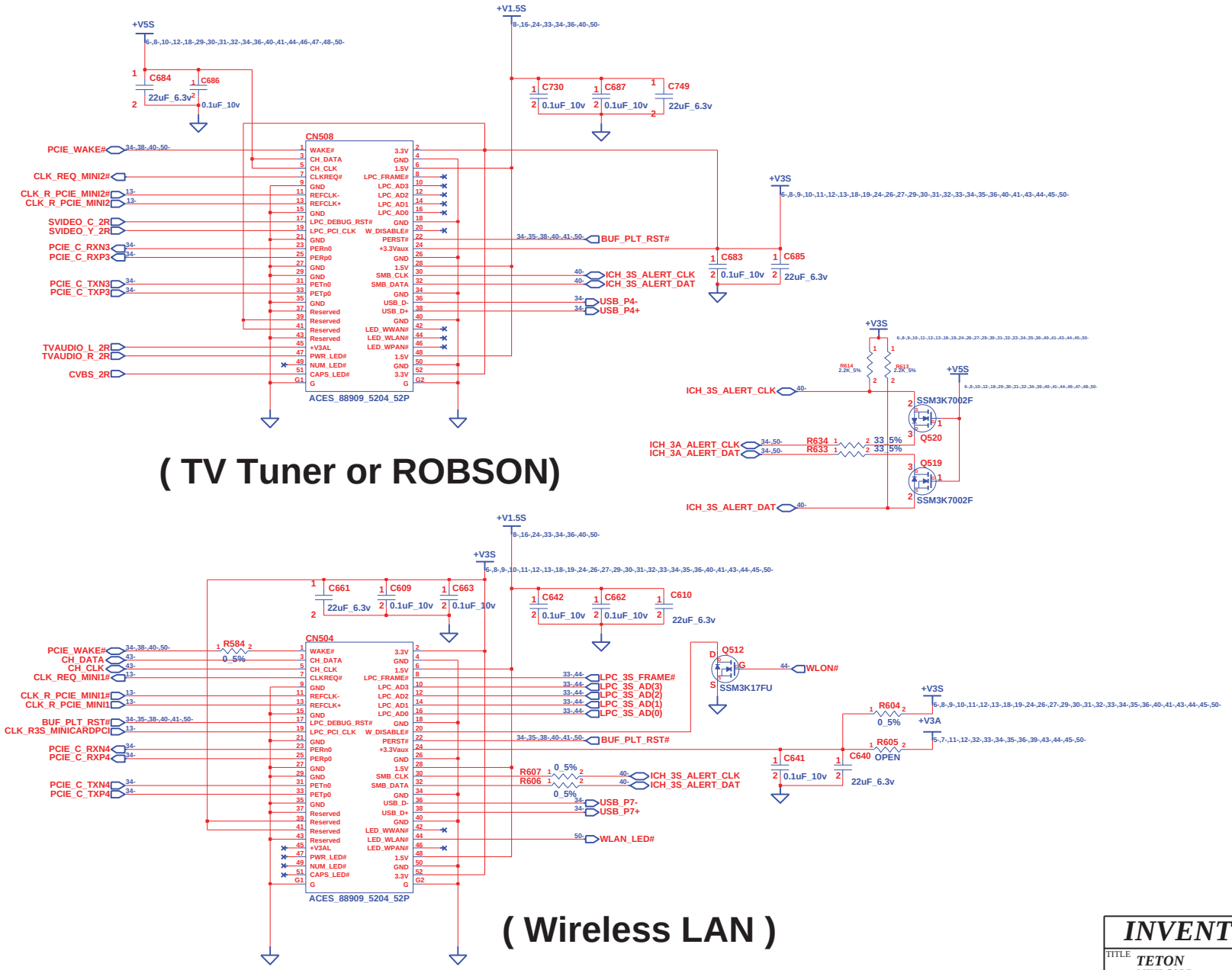

INVENTEC			
TITLE	TETON MINI CARD		
SIZE A3	CODE CS	DOC. NUMBER Model_No	REV X01
CHANGE by RD-EE3	11-Oct-2007	SHEET 40 OF 56	

ODD

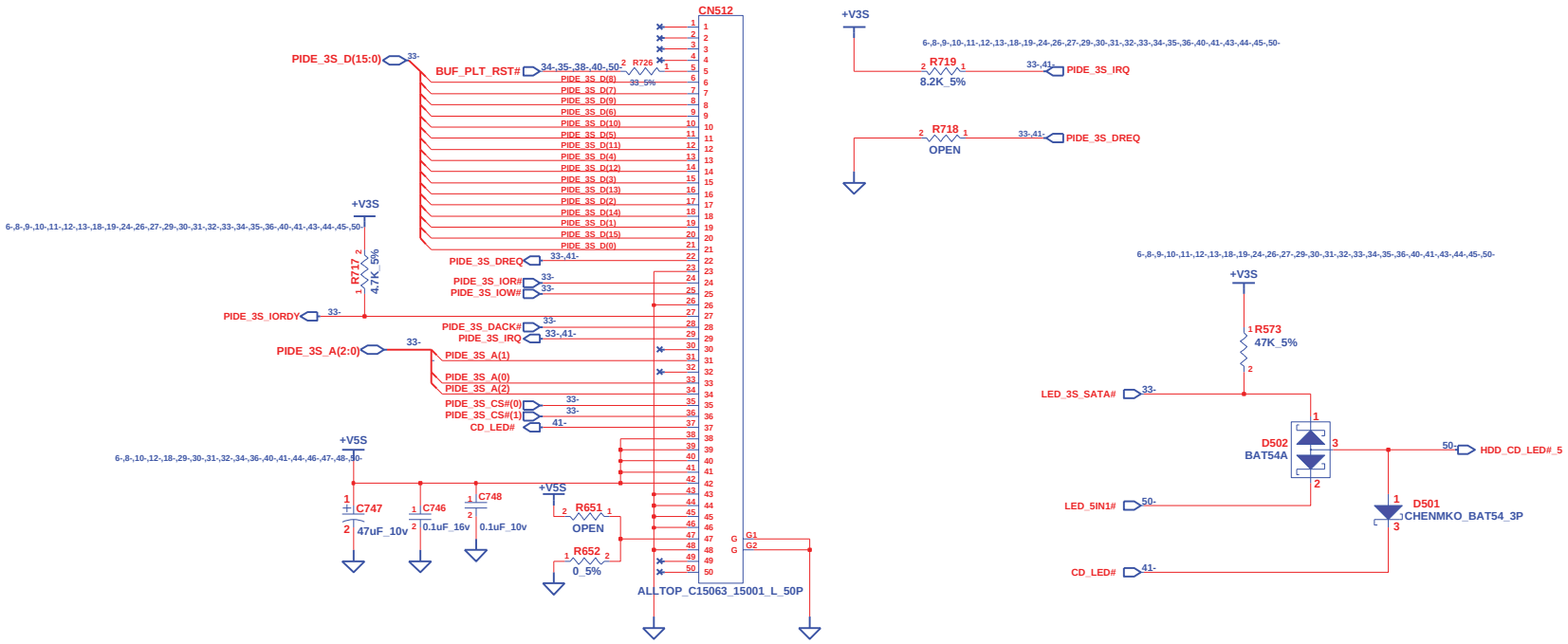

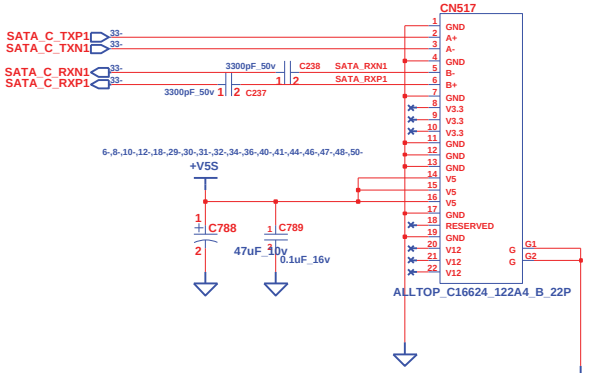

HDD2

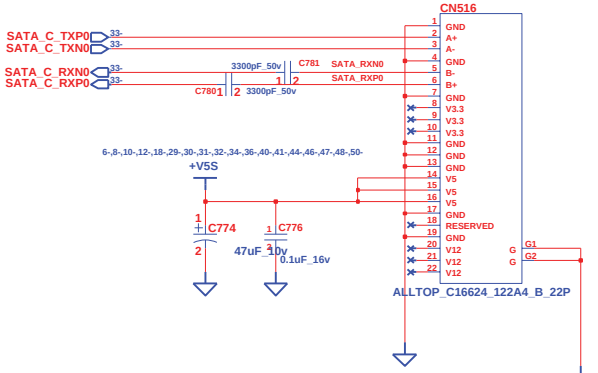

HDD1

INVENTEC			
TITLE TETON ODD & HDD CONN			
SIZE A3	CODE CS	DOC. NUMBER Model_No	REV X01
CHANGE by RD-EE3	17-Oct-2007	SHEET 41 OF 56	

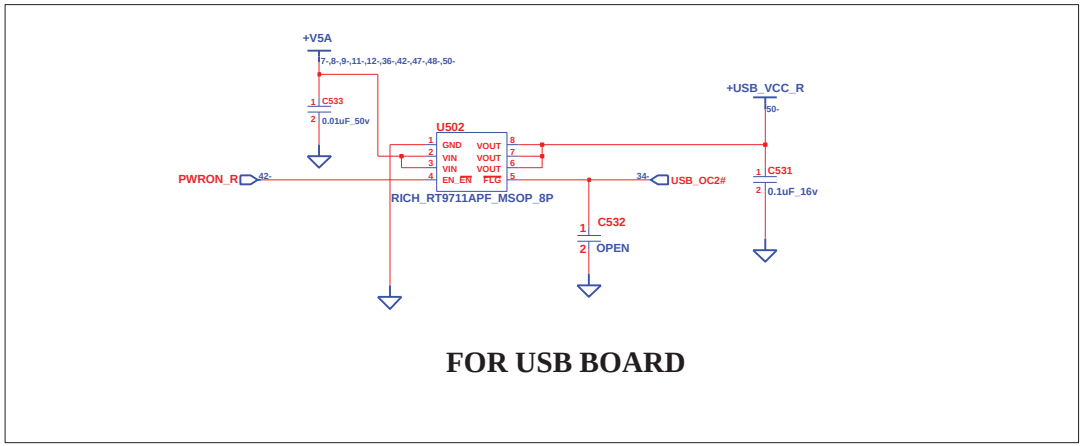

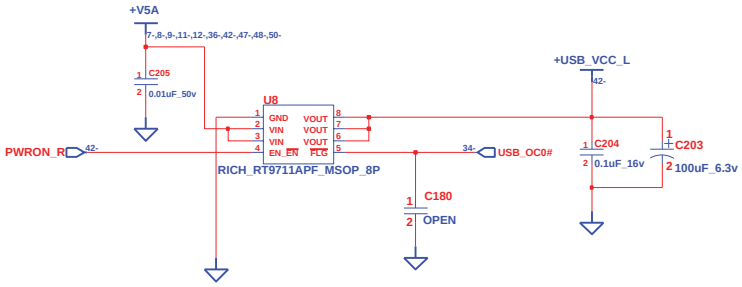

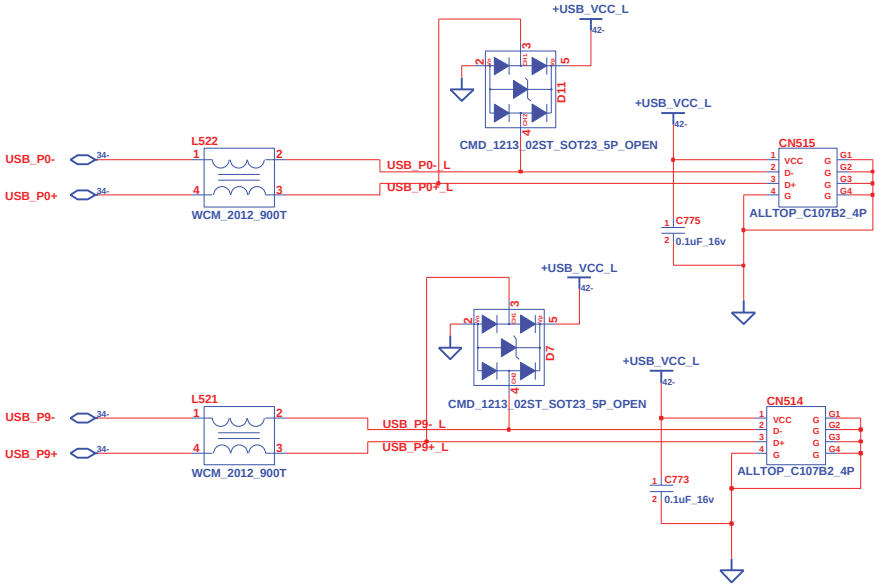

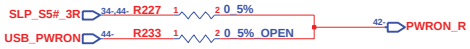

USB POWER STATE	S0	S3	S5
AC MODE	ON	ON	OFF
DC MODE	ON	ON	OFF

INVENTEC

TITLE: *TETON*
USB CONN

SIZE	CODE	DOC. NUMBER	REV
A3	CS	*Model_No*	*X01*

CHANGE by *RD-EE3* *25-Oct-2007* SHEET 42 OF 56

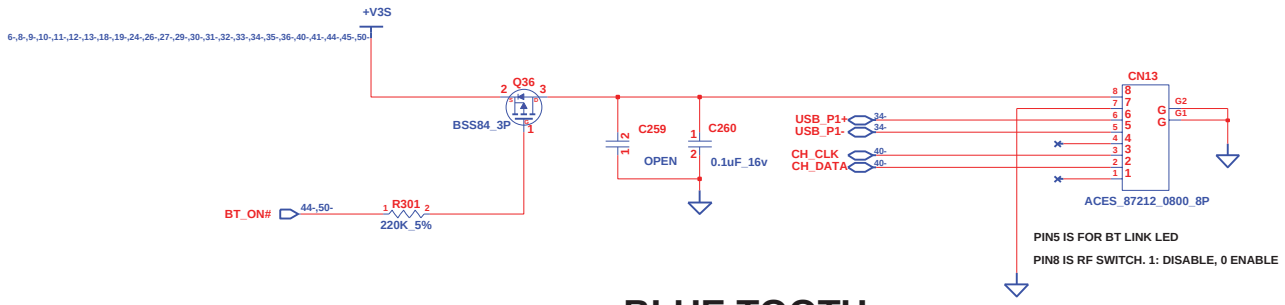

BLUE TOOTH

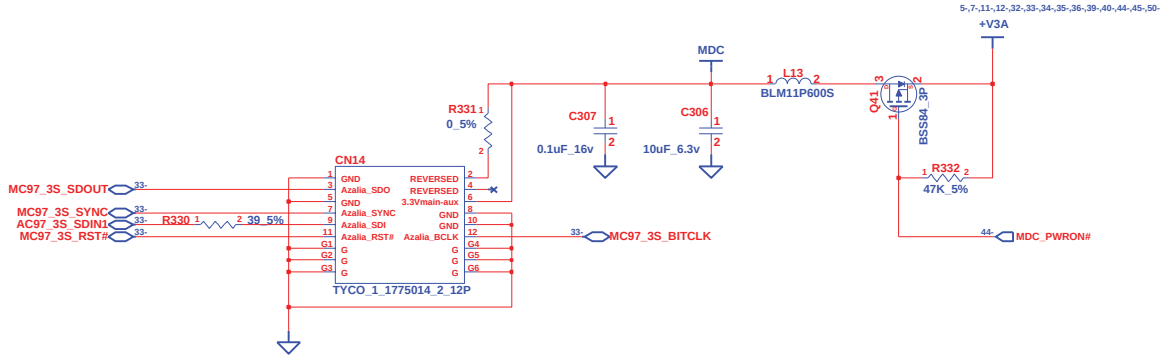

MDC

CHANGE by	RD-EE3	24-Oct-2007	

INVENTEC

TITLE: *TETON BLUETOOTH*

SIZE	CODE	DOC. NUMBER	REV
A3	CS	Model_No	X01

SHEET 43 OF 56

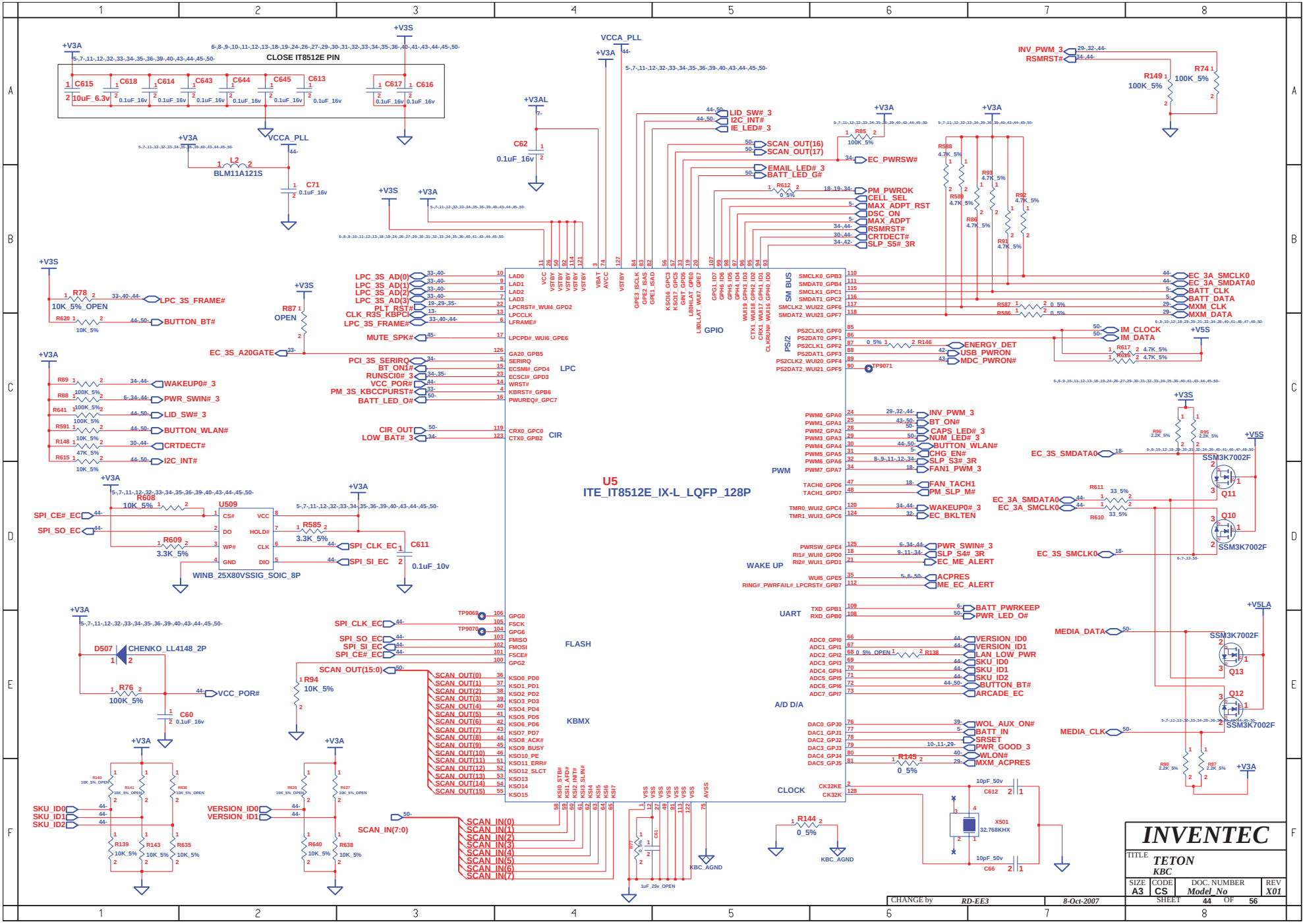
CLOSE IT8512E PIN
U5
ITE_IT8512E_IX-L_LQFP_128P
LPC
GPIO
SM BUS
PS/2
PWM
WAKE UP
UART
A/D D/A
CLOCK
FLASH
KBMX
CIR
U509
WINB_25X80VSSIG_SOIC_8P
INVENTEC
TITLE
TETON
KBC
SIZE
A3
CODE
CS
DOC. NUMBER
Model_No
REV
X01
CHANGE by
RD-EE3
8-Oct-2007
SHEET
44
OF
56

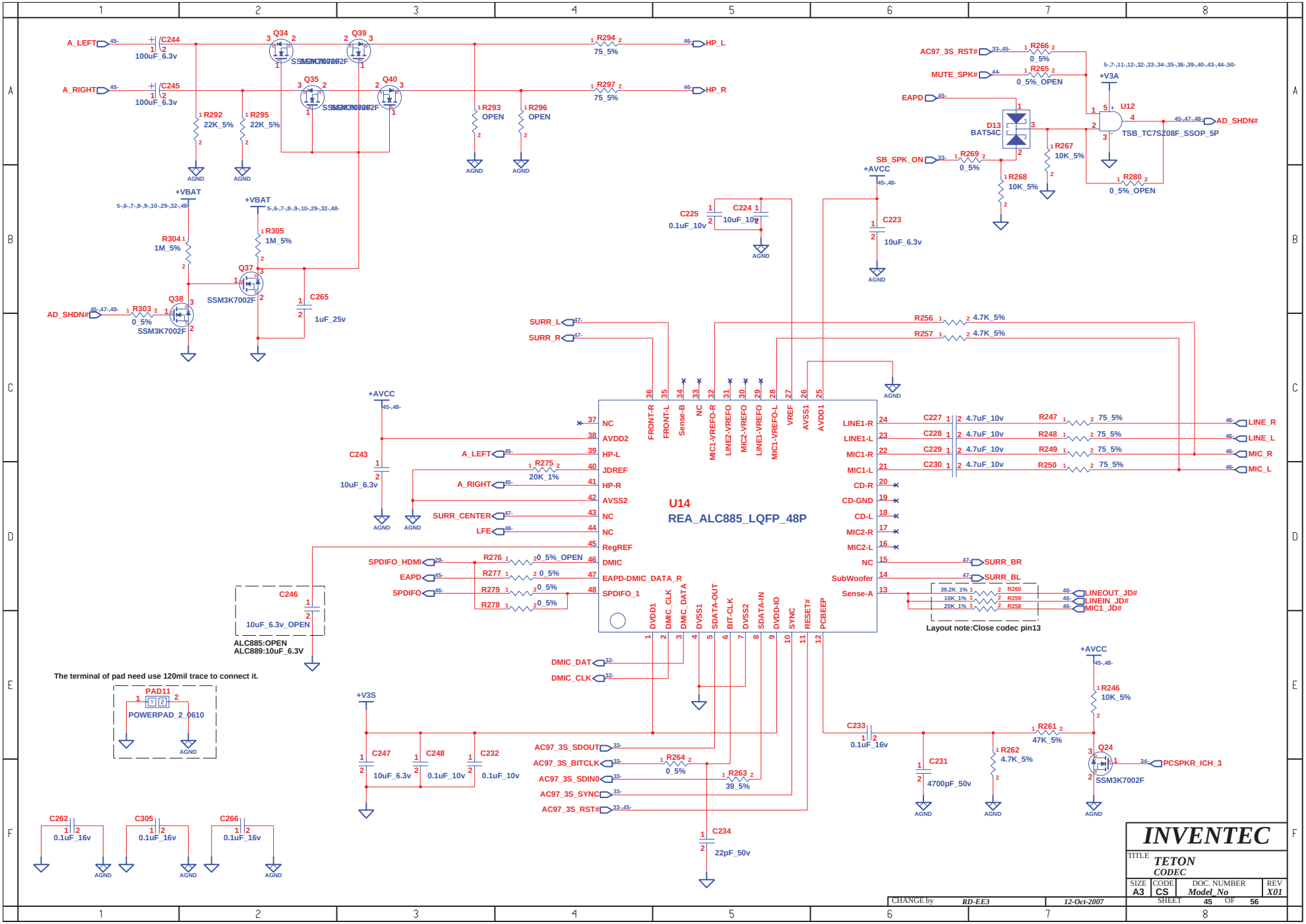
A_LEFT
A_RIGHT
C244
C245
100uF_6.3v
Q34
Q39
Q35
Q40
SSM3K7002F
R294
R297
75_5%
HP_L
HP_R
R292
R295
22K_5%
R293
R296
OPEN
AGND
+VBAT
R304
1M_5%
R305
Q37
Q38
R303
0_5%
AD_SHDN#
C265
1uF_25v
AC97_3S_RST#
R266
R265
MUTE_SPK#
0_5%_OPEN
+V3A
EAPD
D13
BAT54C
U12
TSB_TC7SZ08F_SSOP_5P
R267
10K_5%
SB_SPK_ON
R269
R268
R280
+AVCC
C225
0.1uF_10v
C224
10uF_10v
C223
10uF_6.3v
SURR_L
SURR_R
R256
R257
4.7K_5%
U14
REA_ALC885_LQFP_48P
NC
AVDD2
HP-L
JDREF
HP-R
AVSS2
RegREF
DMIC
EAPD-DMIC_DATA_R
SPDIFO_1
FRONT-R
FRONT-L
Sense-B
MIC1-VREFO-R
LINE2-VREFO
MIC2-VREFO
LINE1-VREFO
MIC1-VREFO-L
VREF
AVSS1
AVDD1
LINE1-R
LINE1-L
MIC1-R
MIC1-L
CD-R
CD-GND
CD-L
MIC2-R
MIC2-L
SubWoofer
Sense-A
DVDD1
DMIC_CLK
DMIC_DATA
DVSS1
SDATA-OUT
BIT-CLK
DVSS2
SDATA-IN
DVDD-IO
SYNC
RESET#
PCBEEP
A_LEFT
A_RIGHT
SURR_CENTER
LFE
SPDIFO_HDMI
EAPD
SPDIFO
R275
20K_1%
R276
R277
R279
R278
0_5%_OPEN
0_5%
C243
10uF_6.3v
C246
10uF_6.3v_OPEN
ALC885:OPEN
ALC889:10uF_6.3V
C227
C228
C229
C230
4.7uF_10v
R247
R248
R249
R250
75_5%
LINE_R
LINE_L
MIC_R
MIC_L
SURR_BR
SURR_BL
R260
R259
R258
39.2K_1%
10K_1%
20K_1%
LINEOUT_JD#
LINEIN_JD#
MIC1_JD#
Layout note:Close codec pin13
The terminal of pad need use 120mil trace to connect it.
PAD11
POWERPAD_2_0610
DMIC_DAT
DMIC_CLK
+V3S
C247
C248
C232
10uF_6.3v
0.1uF_10v
AC97_3S_SDOUT
AC97_3S_BITCLK
AC97_3S_SDIN0
AC97_3S_SYNC
AC97_3S_RST#
R264
R263
39_5%
C234
22pF_50v
C233
0.1uF_16v
R246
10K_5%
R261
47K_5%
C231
4700pF_50v
R262
4.7K_5%
Q24
PCSPKR_ICH_3
C262
C305
C266
INVENTEC
TITLE
TETON
CODEC
SIZE
A3
CODE
CS
DOC. NUMBER
Model_No
REV
X01
CHANGE by
RD-EE3
12-Oct-2007
SHEET
45
OF
56

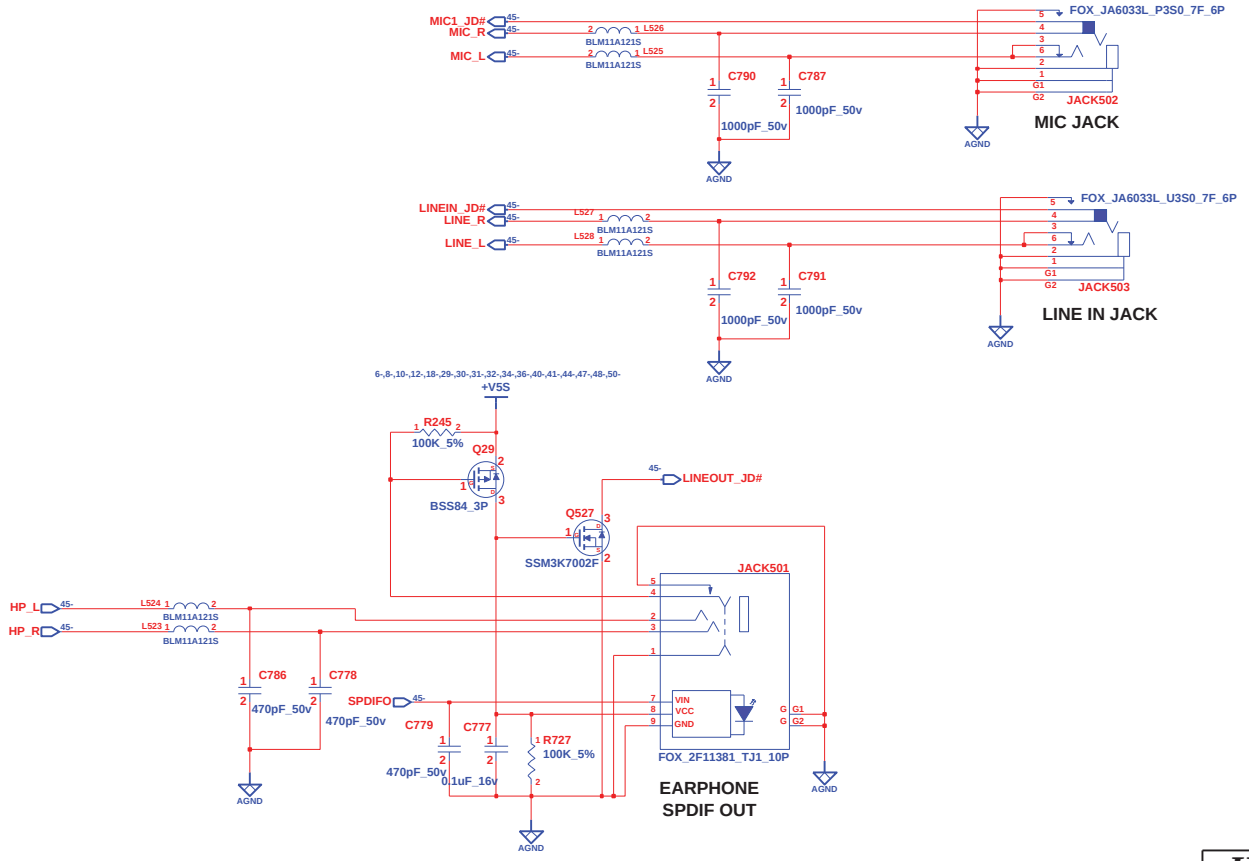

INVENTEC			
TITLE TETON			
SIZE A3	CODE CS	DOC. NUMBER Model_No	REV X01
CHANGE by RD-EE3	27-Nov-2007	SHEET 46 OF 56	

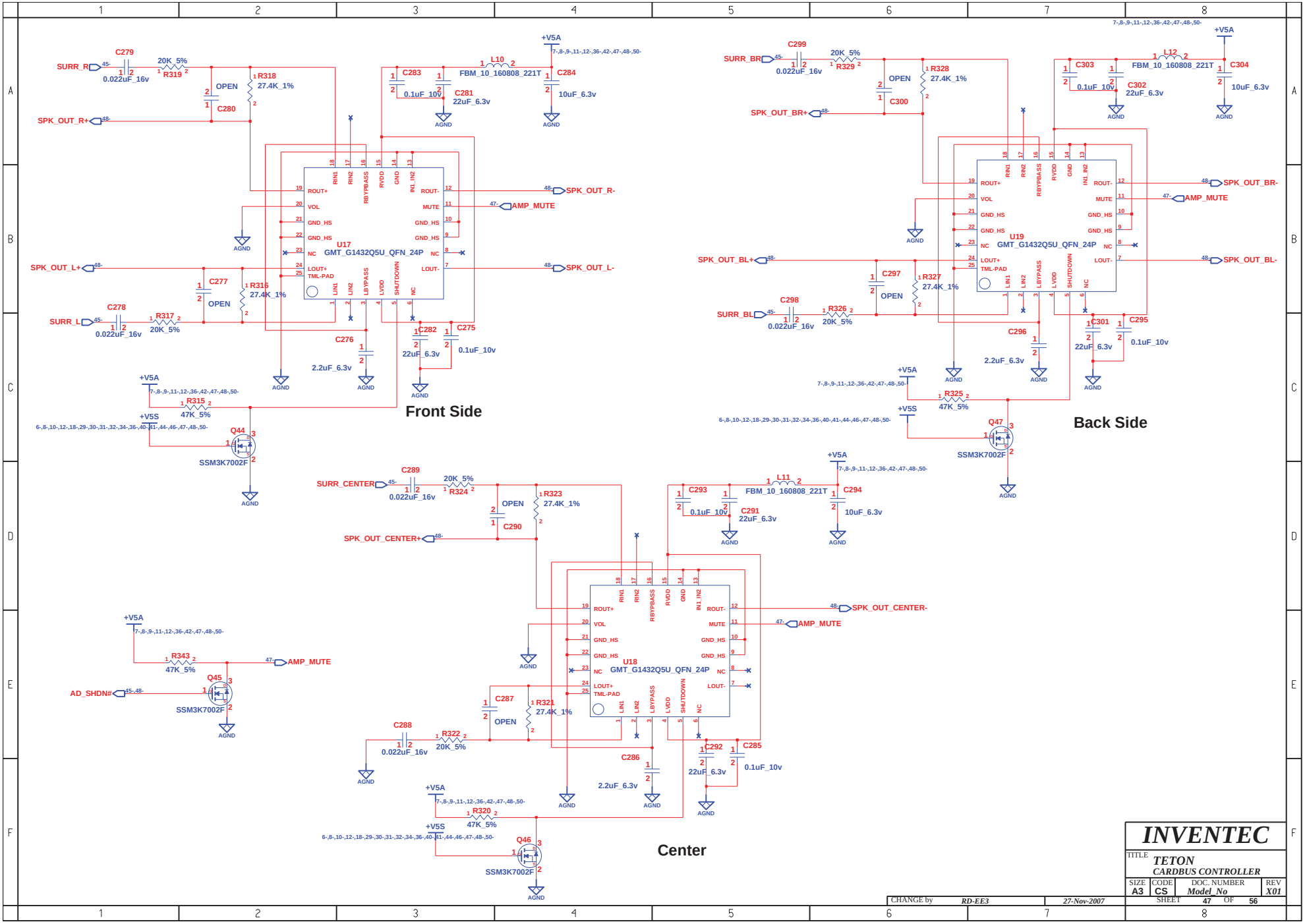
Front Side
Back Side
Center
U17 GMT_G1432Q5U_QFN_24P
U19 GMT_G1432Q5U_QFN_24P
U18 GMT_G1432Q5U_QFN_24P
SURR_R
SURR_L
SPK_OUT_R+
SPK_OUT_L+
SPK_OUT_R-
SPK_OUT_L-
AMP_MUTE
SURR_BR
SURR_BL
SPK_OUT_BR+
SPK_OUT_BL+
SPK_OUT_BR-
SPK_OUT_BL-
SURR_CENTER
SPK_OUT_CENTER+
SPK_OUT_CENTER-
AD_SHDN#
SSM3K7002F
FBM_10_160808_221T
+V5A
+V5S
AGND
INVENTEC
TITLE TETON CARDBUS CONTROLLER
SIZE A3 CODE CS DOC. NUMBER Model_No REV X01
CHANGE by RD-EE3 27-Nov-2007
SHEET 47 OF 56

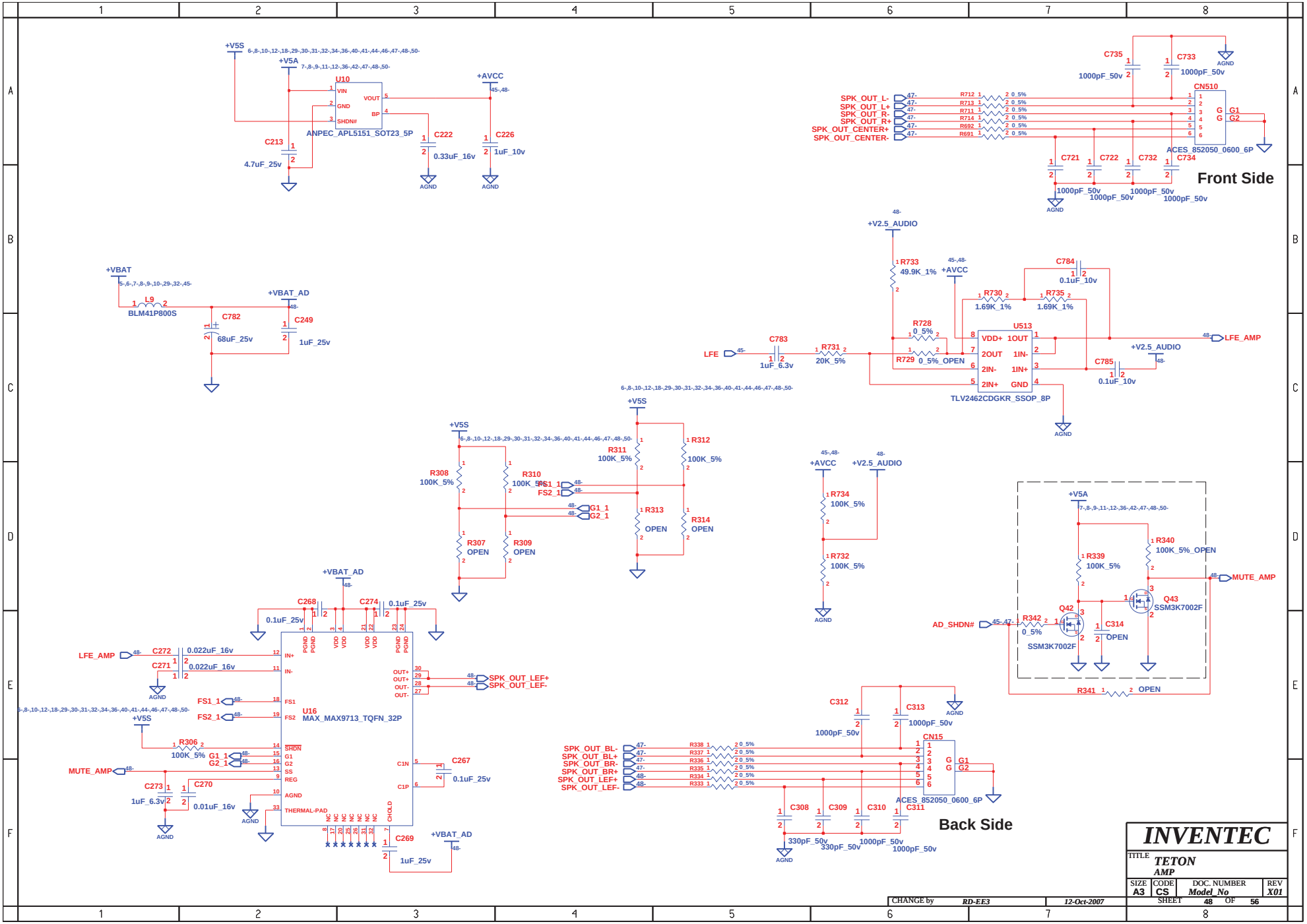
+V5S
+V5A
U10
VIN
GND
SHDN#
VOUT
BP
ANPEC_APL5151_SOT23_5P
C213
4.7uF_25v
C222
0.33uF_16v
+AVCC
C226
1uF_10v
AGND
C735
1000pF_50v
C733
1000pF_50v
CN510
SPK_OUT_L-
SPK_OUT_L+
SPK_OUT_R-
SPK_OUT_R+
SPK_OUT_CENTER+
SPK_OUT_CENTER-
R712
R713
R711
R714
R692
R691
ACES_852050_0600_6P
C721
C722
C732
C734
Front Side
+VBAT
L9
BLM41P800S
+VBAT_AD
C782
68uF_25v
C249
1uF_25v
+V2.5_AUDIO
R733
49.9K_1%
C784
0.1uF_10v
R730
1.69K_1%
R735
1.69K_1%
R728
0_5%
R729
0_5%_OPEN
C783
1uF_6.3v
R731
20K_5%
LFE
U513
VDD+
1OUT
2OUT
1IN-
2IN-
1IN+
2IN+
GND
TLV2462CDGKR_SSOP_8P
LFE_AMP
C785
0.1uF_10v
R308
100K_5%
R310
100K_5%
FS1_1
FS2_1
G1_1
G2_1
R307
OPEN
R309
OPEN
R311
100K_5%
R312
100K_5%
R313
OPEN
R314
OPEN
R734
100K_5%
R732
100K_5%
R340
100K_5%_OPEN
R339
100K_5%
Q42
SSM3K7002F
Q43
SSM3K7002F
AD_SHDN#
R342
0_5%
C314
OPEN
MUTE_AMP
R341
OPEN
C268
0.1uF_25v
C274
0.1uF_25v
C272
0.022uF_16v
C271
0.022uF_16v
LFE_AMP
U16
MAX_MAX9713_TQFN_32P
IN+
IN-
FS1
FS2
SHDN
G1
G2
SS
REG
AGND
THERMAL-PAD
OUT+
OUT-
SPK_OUT_LEF+
SPK_OUT_LEF-
R306
100K_5%
MUTE_AMP
C273
1uF_6.3v
C270
0.01uF_16v
C267
0.1uF_25v
C269
1uF_25v
C312
1000pF_50v
C313
1000pF_50v
CN15
SPK_OUT_BL-
SPK_OUT_BL+
SPK_OUT_BR-
SPK_OUT_BR+
SPK_OUT_LEF+
SPK_OUT_LEF-
R338
R337
R336
R335
R334
R333
ACES_852050_0600_6P
C308
330pF_50v
C309
330pF_50v
C310
1000pF_50v
C311
1000pF_50v
Back Side
INVENTEC
TITLE
TETON
AMP
SIZE
A3
CODE
CS
DOC. NUMBER
Model_No
REV
X01
SHEET
48
OF
56
CHANGE by
RD-EE3
12-Oct-2007

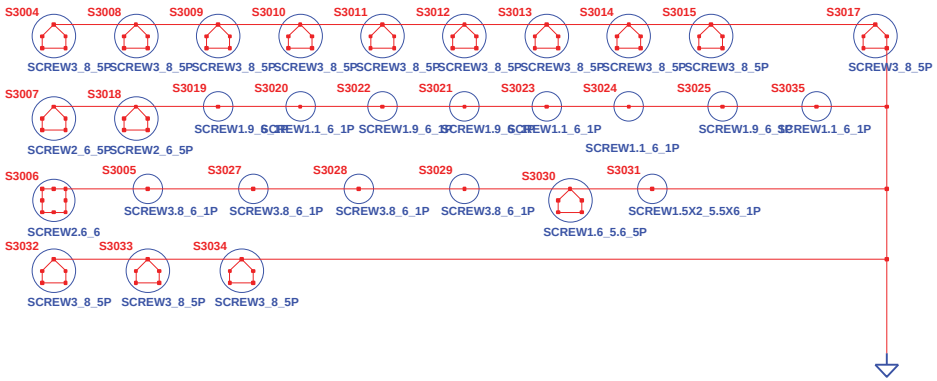

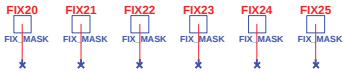

CHANGE by	RD-EE3	3-Dec-2007	INVENTEC		
			TITLE TETON SCREW&EMC SOLUTION		
			SIZE A3	CODE CS	DOC. NUMBER Model_No	REV X01
			SHEET 49 OF 56		

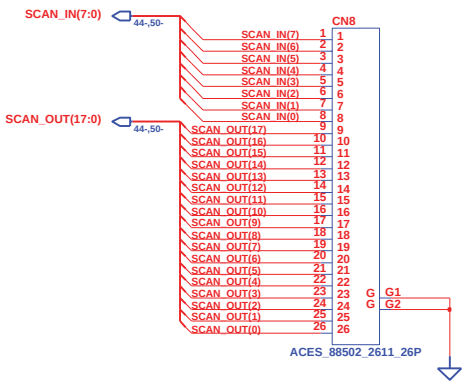

KEYBOARD CNTR

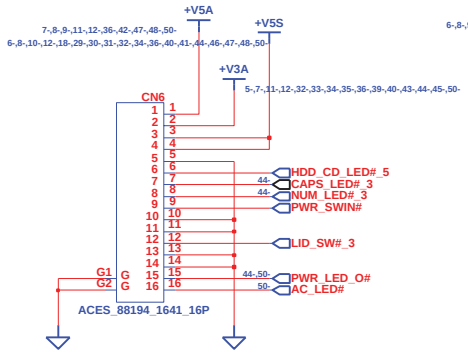

TO POWER BUTTON BOARD

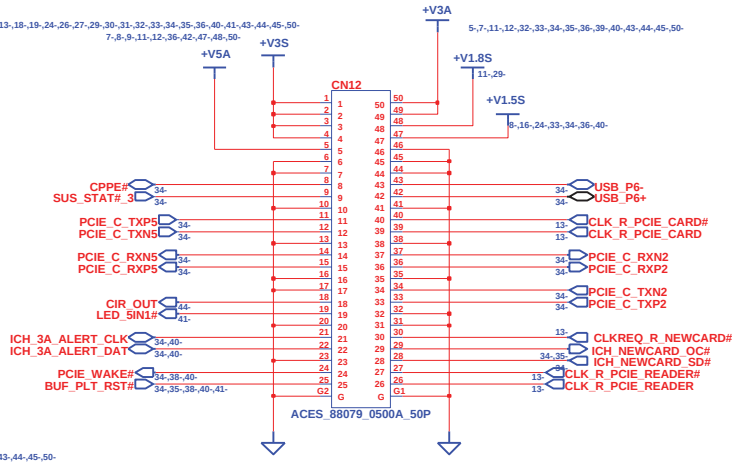

TO IO BOARD

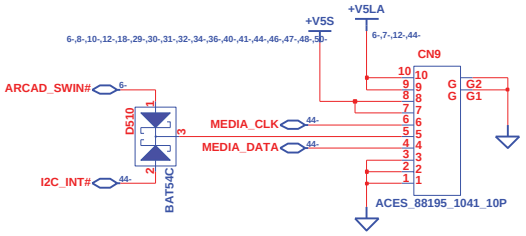

MEDIA CONSOLE CNTR

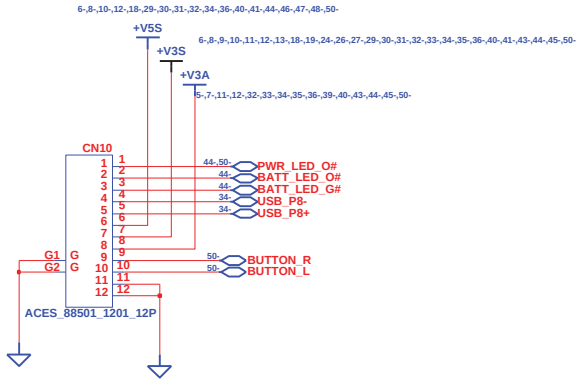

To TP BUTTON BOARD

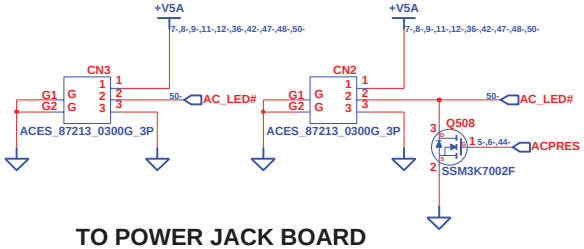

TO POWER JACK BOARD

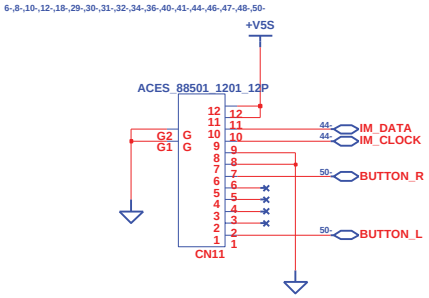

To TP

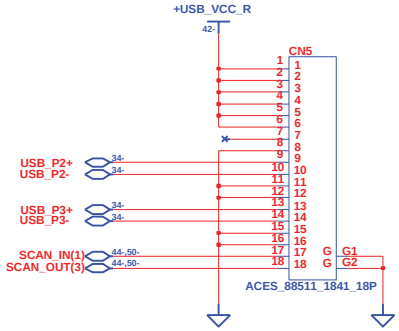

To USB BOARD

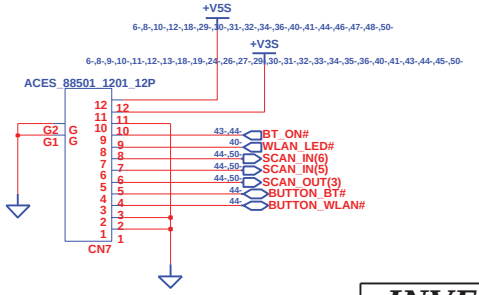

To HOTKEY BOARD BOARD

INVENTEC			
TITLE	TETON TO OTHER BOARD CONN		
SIZE A3	CODE CS	DOC. NUMBER Model_No	REV X01
CHANGE by RD-EE3	3-Dec-2007	SHEET 50 OF 56	

USB BOARD

TV ANT

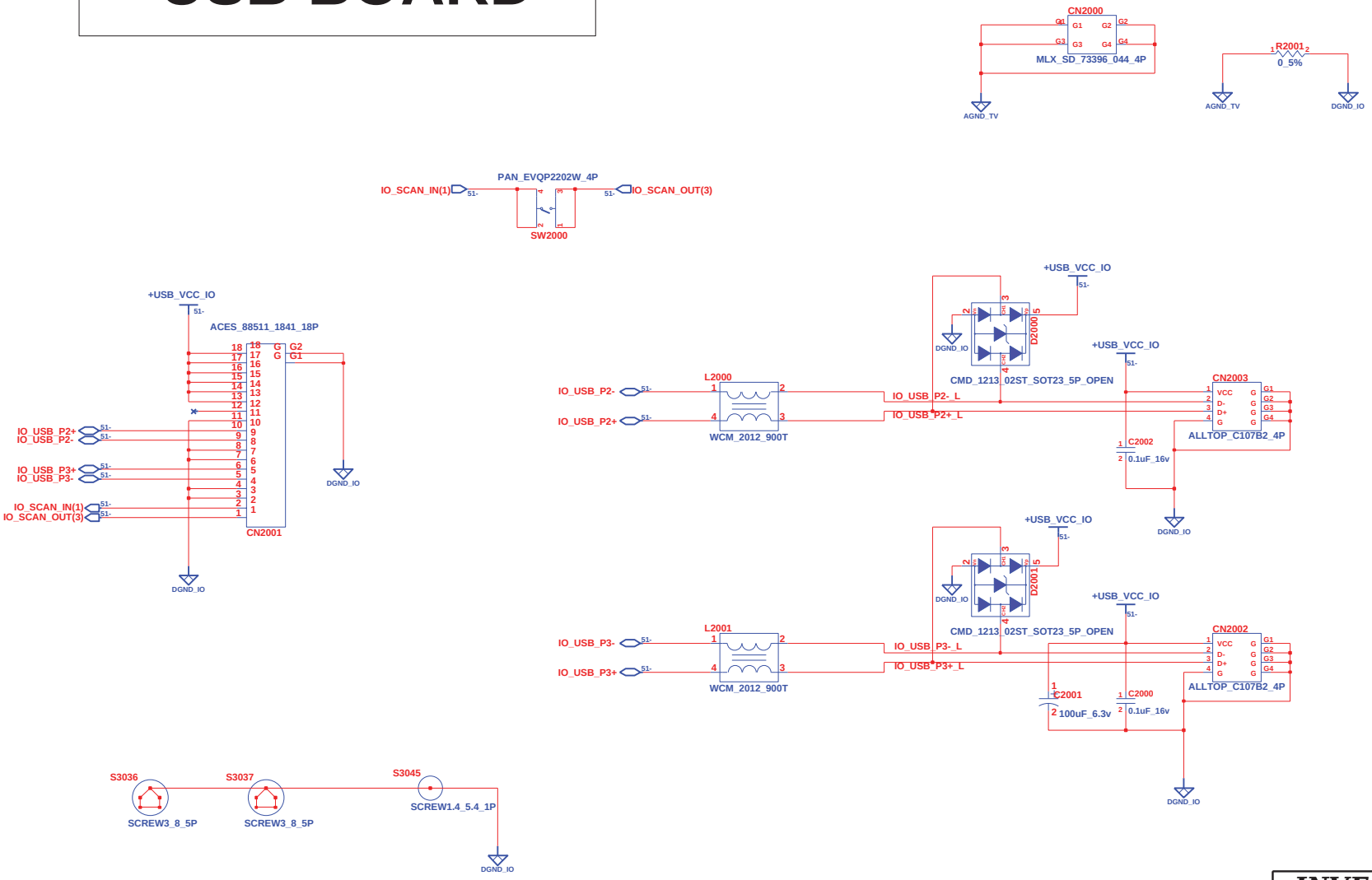

INVENTEC			
TITLE TETON USB BOARD			
SIZE A3	CODE CS	DOC. NUMBER Model_No	REV X01
CHANGE by RD-EE3	22-Oct-2007	SHEET 51 OF 56	

PowerButton Board

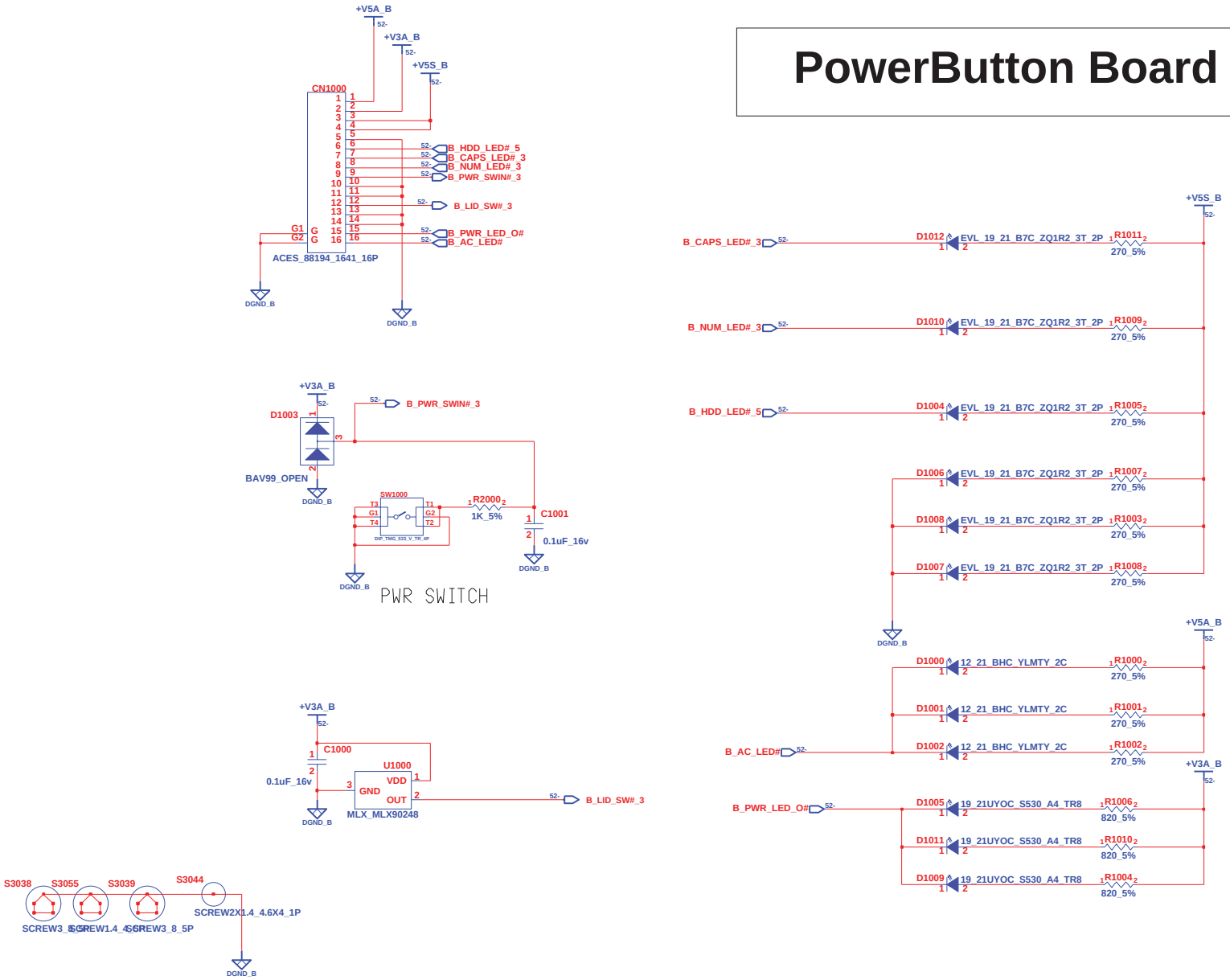

INVENTEC			
TITLE TETON POWER BUTTON BOARD			
SIZE A3	CODE CS	DOC. NUMBER Model_No	REV X01
CHANGE by RD-EE3	27-Nov-2007	SHEET 52 OF 56	

TOUCH PAD BUTTON BOARD

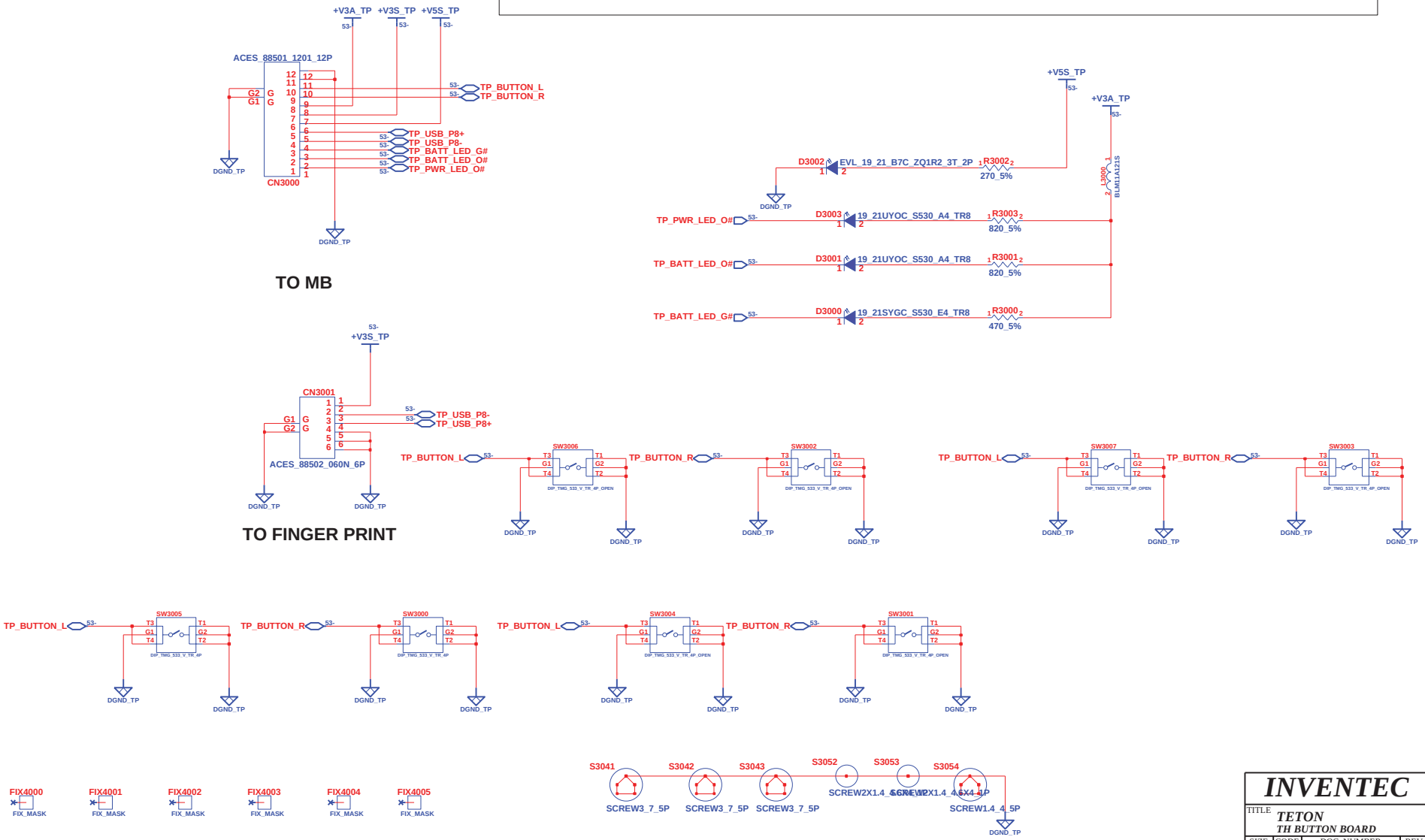

INVENTEC			
TITLE: TETON TH BUTTON BOARD			
SIZE A3	CODE CS	DOC. NUMBER Model_No	REV X01
CHANGE by RD-EE3	7-Oct-2007	SHEET 53 OF 56	

LED Board 1

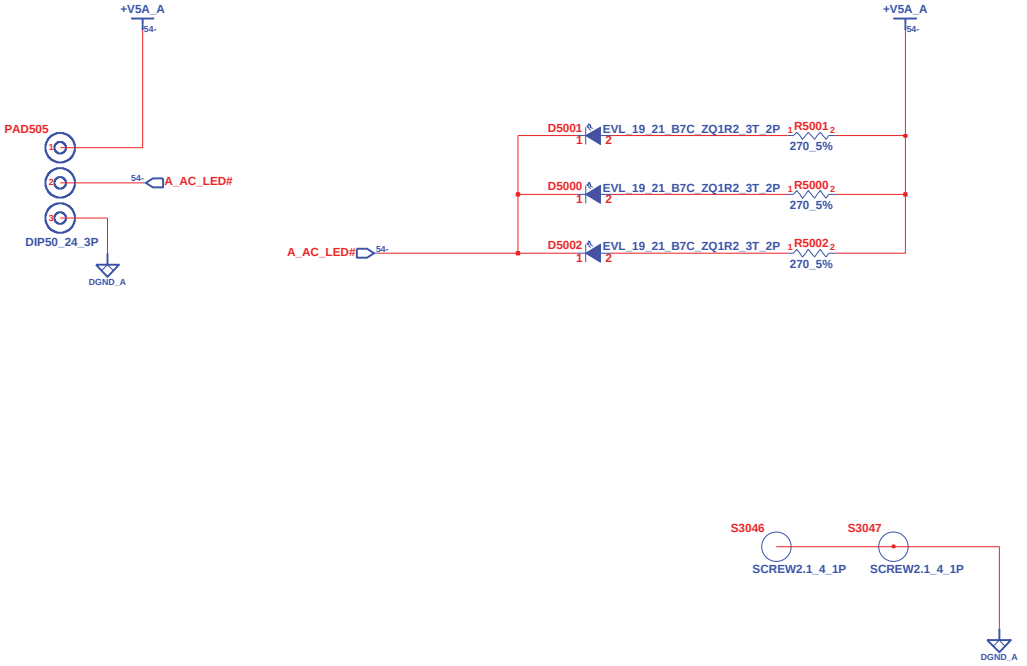

INVENTEC			
TITLE TETON PowerJack BOARD			
SIZE A3	CODE CS	DOC. NUMBER Model_No	REV X01
CHANGE by RD-EE3	4-Dec-2007	SHEET 54 OF 56	

LED Board 2

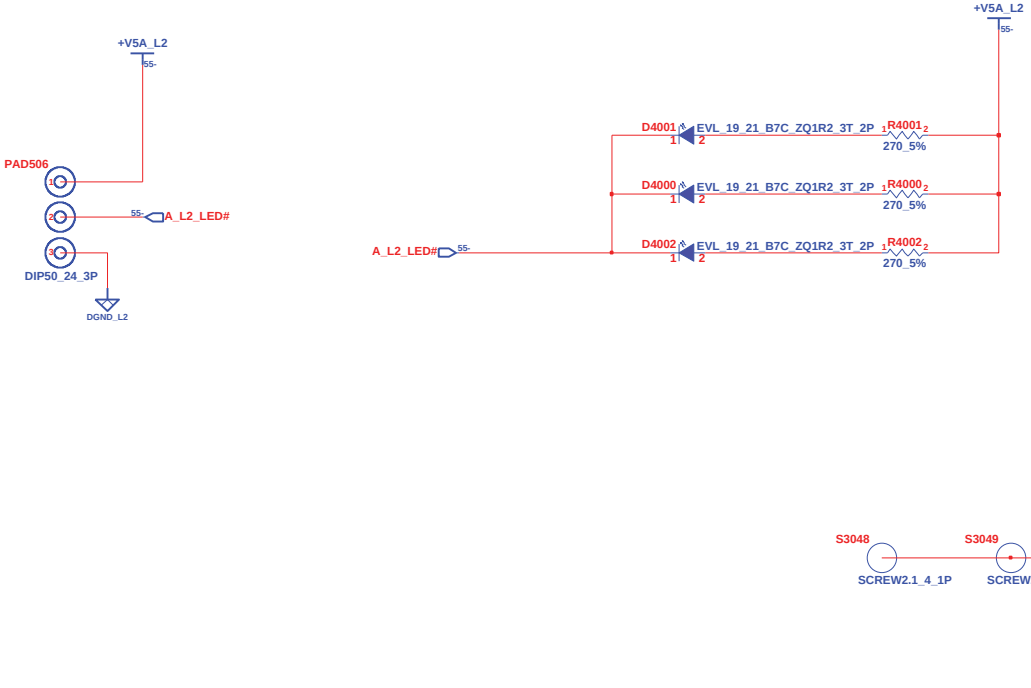

INVENTEC			
TITLE TETON 6 IN 1 CARD CONN			
SIZE A3	CODE CS	DOC. NUMBER Model_No	REV X01
CHANGE by RD-EE3	4-Dec-2007	SHEET 55 OF 56	

E key Board

CHANGE by	RD-EE3	28-Nov-2007			

INVENTEC

TITLE
TETON
E KEY BOARD

SIZE	CODE	DOC. NUMBER	REV
A3	CS	Model_No	X01

SHEET 56 OF 56